1. ALL RESISTANCE VALUES ARE IN OHMS, 0.1 WATT +/- 5%.
2. ALL CAPACITANCE VALUES ARE IN MICROFARADS.
3. ALL CRYSTALS & OSCILLATOR VALUES ARE IN HERTZ.

| REV | ZONE | ECN | DESCRIPTION OF CHANGE | CK APPD / DATE | ENG APPD / DATE |
|---|---|---|---|---|---|
| | | | | ? | ? |

# SCHEM,DUBLIN,M87
# 10/12/07
# DVT


| PDF PAGE | CSA PAGE | CONTENTS | SYNC MASTER | DATE |
|---|---|---|---|---|
| 1 | 1 | Table of Contents | | |
| 2 | 2 | Block Diagram | | |
| 3 | 4 | BOM Configuration | (Master) | (Master) |
| 4 | 9 | Aliases | (Master) | (Master) |
| 5 | 34 | PCI-E MiniCard Connector | (Master) | (Master) |
| 6 | 35 | ExpressCard Connector | (Master) | (Master) |
| 7 | 36 | MLB I/O Board Connector | (Master) | (Master) |
| 8 | 46 | Left USB Port | (Master) | (Master) |
| 9 | 57 | Current & Thermal Sensors | (Master) | (Master) |
| 10 | 62 | AUDIO:CODEC | LENGO_M87_AUDIO | 10/05/2007 |
| 11 | 65 | AUDIO: HEADPHONE AMP | LENGO_M87_AUDIO | 10/05/2007 |
| 12 | 66 | AUDIO:SPEAKER AMP | LENGO_M87_AUDIO | 10/05/2007 |
| 13 | 67 | AUDIO: JACKS | LENGO_M87_AUDIO | 10/05/2007 |
| 14 | 68 | AUDIO: JACK TRANSLATORS | LENGO_M87_AUDIO | 10/05/2007 |
| 15 | 69 | DC-In & Battery Connectors | (Master) | (Master) |
| 16 | 76 | 5V/3.3V SUPPLY | <MASTER> | <MASTER> |
| 17 | 79 | PBus Supply & Batt. Charger | (Master) | (Master) |
| 18 | 90 | Inverter Connector | SPLIT_INVERTER | 12/06/2006 |
| 19 | 98 | LCD Backlight Support | M88_MLB | 07/05/2007 |
| 20 | 99 | Cross Reference Page | | |
| 21 | 100 | Cross Reference Page | | |
| 22 | 101 | Cross Reference Page | | |
| 23 | 102 | Cross Reference Page | | |


| PART# | QTY | DESCRIPTION | REFERENCE DESIGNATOR(S) | CRITICAL | BOM OPTION |
|---|---|---|---|---|---|
| 051-7447 | 1 | SCHEM,DUBLIN,M87 | SCH1 | CRITICAL | |
| 820-2273 | 1 | PCBF,DUBLIN,M87 | PCB1 | CRITICAL | |

DIMENSIONS ARE IN MILLIMETERS
XX ±
X.XX ±
X.XXX ±
ANGLES ±

DO NOT SCALE DRAWING

THIRD ANGLE PROJECTION

METRIC

| | | | |
|---|---|---|---|
| DRAFTER | | DESIGN CK | |
| ENG APPD | | MFG APPD | |
| QA APPD | | DESIGNER | |
| RELEASE | | SCALE NONE | |

MATERIAL/FINISH NOTED AS APPLICABLE

SIZE D

APPLE INC.


NOTICE OF PROPRIETARY PROPERTY

THE INFORMATION CONTAINED HEREIN IS THE PROPRIETARY PROPERTY OF APPLE COMPUTER, INC. THE POSSESSOR AGREES TO THE FOLLOWING

I TO MAINTAIN THE DOCUMENT IN CONFIDENCE
II NOT TO REPRODUCE OR COPY IT
III NOT TO REVEAL OR PUBLISH IN WHOLE OR PART


TITLE
SCHEM,DUBLIN,M87

DRAWING NUMBER 051-7447 REV. 9.0.0

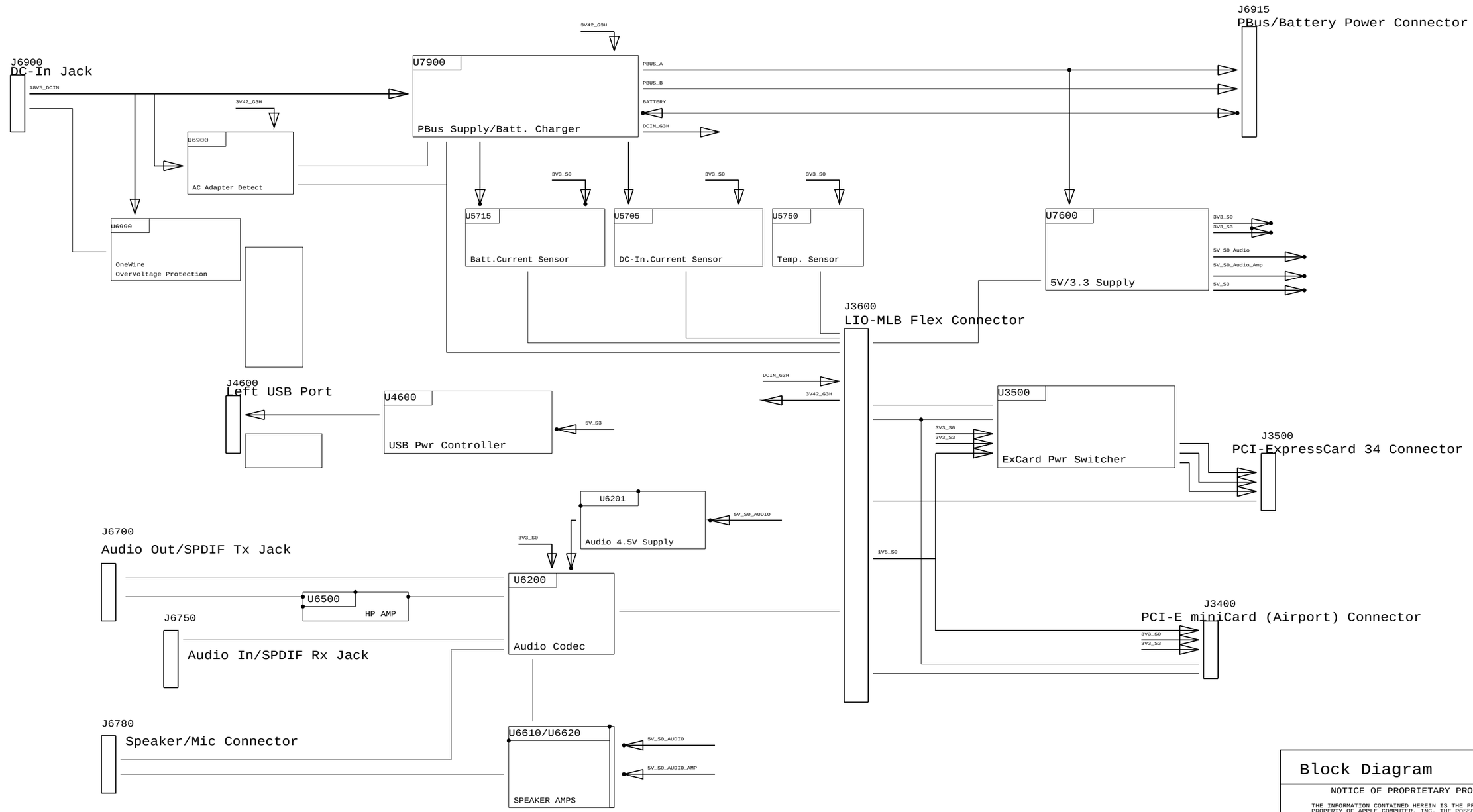


# Block Diagram

NOTICE OF PROPRIETARY PROPERTY

THE INFORMATION CONTAINED HEREIN IS THE PROPRIETARY PROPERTY OF APPLE COMPUTER, INC. THE POSSESSOR AGREES TO THE FOLLOWING

I TO MAINTAIN THE DOCUMENT IN CONFIDENCE
II NOT TO REPRODUCE OR COPY IT
III NOT TO REVEAL OR PUBLISH IN WHOLE OR PART

APPLE INC.

| SIZE | DRAWING NUMBER | REV. |
|---|---|---|
| D | 051-7447 | 9.0.0 |
| SCALE NONE | SHT 2 | OF 23 |

| BOM NUMBER | BOM NAME | BOM OPTIONS |
|---|---|---|
| 630-9094 | PCBA,DUBLIN,M87 | ALTERNATE,COMMON,M87_COMMON,INV_BYPASS,X5F,BKLT_LED |

| BOM GROUP | BOM OPTIONS |
|---|---|
| M87_COMMON | ISL6257H |

## Bar Code Label / EEE #’s

| PART NUMBER | QTY | DESCRIPTION | REFERENCE DES | CRITICAL | BOM OPTION |
|---|---|---|---|---|---|
| 000-0041 | 1 | PLACEHOLDER FOR EEE/CCC INFO | [EEE:Z3M] | CRITICAL | X5F |

## Alternate Parts

| PART NUMBER | ALTERNATE FOR PART NUMBER | BOM OPTION | REF DES | COMMENTS: |
|---|---|---|---|---|
| 376S0448 | 376S0445 | | ALL | SI7806ADN for FSM6296 |
| 128S0081 | 128S0061 | | ALL | 150uF,6.3V,25MOHM,C2 |
| 128S0093 | 128S0092 | | ALL | 33UF,16V,45MOHM,D2E |
| 353S1717 | 353S1297 | | ALL | LM397,COMPARATOR |
| 376S0560 | 376S0532 | | ALL | SI7999DN for SI7913DN |

BOM Configuration

SYNC_MASTER=(Master) SYNC_DATE=(Master)

NOTICE OF PROPRIETARY PROPERTY

THE INFORMATION CONTAINED HEREIN IS THE PROPRIETARY PROPERTY OF APPLE COMPUTER, INC. THE POSSESSOR AGREES TO THE FOLLOWING

I TO MAINTAIN THE DOCUMENT IN CONFIDENCE

II NOT TO REPRODUCE OR COPY IT

III NOT TO REVEAL OR PUBLISH IN WHOLE OR PART

APPLE INC.

| SIZE | DRAWING NUMBER | REV. |
|---|---|---|
| D | 051-7447 | 9.0.0 |
| SCALE NONE | SHT 3 | OF 23 |

## POWER & GROUNDS

15 =PPDCIN_G3H_LIO_CONN
17 =PPVBATT_G3H_LIO_CONN
→ PPDCIN_G3H
MAKE_BASE=TRUE
VOLTAGE=18.5V
MIN_LINE_WIDTH=0.5mm
MIN_NECK_WIDTH=0.20mm
=PPDCIN_G3H 7

15 =PP18V5_G3H_INRUSH
→ PP18V5_G3H_CHGR
MAKE_BASE=TRUE
VOLTAGE=18.5V
MIN_LINE_WIDTH=0.60mm
MIN_NECK_WIDTH=0.20mm
=PP18V5_G3H_CHGR 17

17 =PPVBAT_G3H_CHGR_REG
→ PPVBAT_G3H_CHGR_REG
MAKE_BASE=TRUE
VOLTAGE=12.6V
MIN_LINE_WIDTH=0.4 mm
MIN_NECK_WIDTH=0.25 mm
=PPBUS_G3H_LIO_CONN 15
=PPVIN_5V3V3 16
=PPBUS_S0_LCDBKLT 19

16 7 =PP3V42_G3H
→ PP3V42_G3H
MAKE_BASE=TRUE
VOLTAGE=3.42V
MIN_LINE_WIDTH=0.5mm
MIN_NECK_WIDTH=0.20mm
=PP3V42_G3H_ACIN 15 17

7 =PP1V5_S0
→ PP1V5_S0
MAKE_BASE=TRUE
VOLTAGE=1.5V
MIN_LINE_WIDTH=0.5mm
MIN_NECK_WIDTH=0.20mm
=PP1V5_S0_MINI 5
=PP1V5_S0_EXCARD 6

16 =PP3V3_S3_REG
→ PP3V3_S3_LIO
MAKE_BASE=TRUE
VOLTAGE=3.3V
MIN_LINE_WIDTH=0.50mm
MIN_NECK_WIDTH=0.20mm
=PP3V3_S3_MINI 5
=PP3V3_S3_EXCARD 6

16 =PP3V3_S0_FET
→ PP3V3_S0_LIO
MAKE_BASE=TRUE
VOLTAGE=3.3V
MIN_LINE_WIDTH=0.30MM
MIN_NECK_WIDTH=0.20MM
=PP3V3_S0_AUDIO 10 13 14
=PP3V3_S0_PBATTISENS 9
=PP3V3_S0_PDCISENS 9
=PP3V3_S0_TMPSNSR 9
=PP3V3_S0_EXCARD 6
=PP3V3_S0_LCDBKLT 19

16 =PP5V_S3_REG
→ PP5V_S3_LIO
MAKE_BASE=TRUE
VOLTAGE=5V
MIN_LINE_WIDTH=0.5mm
MIN_NECK_WIDTH=0.2mm
=PP5V_S3_LTUSB 8
=PP5V_S3_LIO 16

16 =PP5V_S0_FET
→ PP5V_S0_FET
MAKE_BASE=TRUE
VOLTAGE=5V
MIN_LINE_WIDTH=0.50 MM
MIN_NECK_WIDTH=0.25 MM
=PP5V_S0_LCDBKLT 19
=BKLT_PPBUS_S0_LCDBKLT_EN

16 =PP5V_S0_AUDIO_XW
→ PP5V_S0_AUDIO
MAKE_BASE=TRUE
VOLTAGE=5V
MIN_LINE_WIDTH=0.30 MM
MIN_NECK_WIDTH=0.20 MM
=PP5V_S0_AUDIO 10 11

16 =PP5V_S0_AUDIO_AMP_XW
→ PP5V_S0_AUDIO_AMP
MAKE_BASE=TRUE
VOLTAGE=5V
MIN_LINE_WIDTH=0.60 MM
MIN_NECK_WIDTH=0.10 MM
=PP5V_S0_AUDIO_AMP 12

16 13 12 =GND_AUDIO_AMP
→ GND_AUDIO_AMP
MAKE_BASE=TRUE
VOLTAGE=0V
MIN_LINE_WIDTH=0.50mm
MIN_NECK_WIDTH=0.20mm

=GND_AUDIO
→ GND_AUDIO
MAKE_BASE=TRUE
VOLTAGE=0V
GND_AUDIO_CODEC 10 11 12 13 14 16

ZT0920
3P2R2P7
1 CHASSIS_GND1
MAKE_BASE=TRUE
VOLTAGE=0V
MIN_LINE_WIDTH=0.50mm
MIN_NECK_WIDTH=0.20mm
=GND_CHASSIS_AUDIO_JACK 13

ZT0930
3P2R2P7
1

CHASSIS_GND2
MAKE_BASE=TRUE
VOLTAGE=0V
MIN_LINE_WIDTH=0.50mm
MIN_NECK_WIDTH=0.20mm
=GND_CHASSIS_AUDIO_MIC 14

CHASSIS_GND3
MAKE_BASE=TRUE
VOLTAGE=0V
MIN_LINE_WIDTH=0.50mm
MIN_NECK_WIDTH=0.20mm
=GND_CHASSIS_DCIN_JACK 15

CHASSIS_GND4
MAKE_BASE=TRUE
VOLTAGE=0V
MIN_LINE_WIDTH=0.50mm
MIN_NECK_WIDTH=0.20mm
=GND_CHASSIS_BOTTOM 10 13

ZT0910
3P2R2P7
1
GND
VOLTAGE=0V
MIN_LINE_WIDTH=0.50mm
MIN_NECK_WIDTH=0.20mm

## PCI-E EXPRESS CARD 34

7 6 USB2_EXCARD_P
NET_PHYSICAL_TYPE=USB
NET_SPACING_TYPE=USB
MAX_EXPOSED_LENGTH=6MM
7 6 USB2_EXCARD_N
NET_PHYSICAL_TYPE=USB
NET_SPACING_TYPE=USB
MAX_EXPOSED_LENGTH=6MM
7 6 PCIE_CLK100M_EXCARD_P
NET_PHYSICAL_TYPE=PCIE
NET_SPACING_TYPE=PCIE
MAX_EXPOSED_LENGTH=6MM
7 6 PCIE_CLK100M_EXCARD_N
NET_PHYSICAL_TYPE=PCIE
NET_SPACING_TYPE=PCIE
MAX_EXPOSED_LENGTH=6MM
7 PCIE_CLK100M_EXCARD_UF_P
NET_PHYSICAL_TYPE=PCIE
NET_SPACING_TYPE=PCIE
MAX_EXPOSED_LENGTH=6MM
7 PCIE_CLK100M_EXCARD_UF_N
NET_PHYSICAL_TYPE=PCIE
NET_SPACING_TYPE=PCIE
MAX_EXPOSED_LENGTH=6MM
7 6 PCIE_EXCARD_D2R_P
NET_PHYSICAL_TYPE=PCIE
NET_SPACING_TYPE=PCIE
MAX_EXPOSED_LENGTH=6MM
7 6 PCIE_EXCARD_D2R_N
NET_PHYSICAL_TYPE=PCIE
NET_SPACING_TYPE=PCIE
MAX_EXPOSED_LENGTH=6MM
7 6 PCIE_EXCARD_R2D_P
NET_PHYSICAL_TYPE=PCIE
NET_SPACING_TYPE=PCIE
MAX_EXPOSED_LENGTH=6MM
7 6 PCIE_EXCARD_R2D_N
NET_PHYSICAL_TYPE=PCIE
NET_SPACING_TYPE=PCIE
MAX_EXPOSED_LENGTH=6MM
7 6 EXCARD_CLKREQ_L
7 6 EXCARD_OC_L

7 PCIE_WAKE_L
MAKE_BASE=TRUE
PCIE_WAKE_EXCARD_L 6
PCIE_WAKE_MINI_L 5

## PCI-E MINICARD

7 5 PCIE_MINI_R2D_P
NET_PHYSICAL_TYPE=PCIE
NET_SPACING_TYPE=PCIE
MAX_EXPOSED_LENGTH=6MM
7 5 PCIE_MINI_R2D_N
NET_PHYSICAL_TYPE=PCIE
NET_SPACING_TYPE=PCIE
MAX_EXPOSED_LENGTH=6MM
7 5 PCIE_MINI_D2R_P
NET_PHYSICAL_TYPE=PCIE
NET_SPACING_TYPE=PCIE
MAX_EXPOSED_LENGTH=6MM
7 5 PCIE_MINI_D2R_N
NET_PHYSICAL_TYPE=PCIE
NET_SPACING_TYPE=PCIE
MAX_EXPOSED_LENGTH=6MM
7 5 PCIE_CLK100M_MINI_P
NET_PHYSICAL_TYPE=PCIE
NET_SPACING_TYPE=PCIE
MAX_EXPOSED_LENGTH=6MM
7 5 PCIE_CLK100M_MINI_N
NET_PHYSICAL_TYPE=PCIE
NET_SPACING_TYPE=PCIE
MAX_EXPOSED_LENGTH=6MM
7 PCIE_CLK100M_MINI_UF_P
NET_PHYSICAL_TYPE=PCIE
NET_SPACING_TYPE=PCIE
MAX_EXPOSED_LENGTH=6MM
7 PCIE_CLK100M_MINI_UF_N
NET_PHYSICAL_TYPE=PCIE
NET_SPACING_TYPE=PCIE
MAX_EXPOSED_LENGTH=6MM
7 5 USB2_MINI_P
NET_PHYSICAL_TYPE=USB
NET_SPACING_TYPE=USB
MAX_EXPOSED_LENGTH=6MM
7 5 USB2_MINI_N
NET_PHYSICAL_TYPE=USB
NET_SPACING_TYPE=USB
MAX_EXPOSED_LENGTH=6MM
7 5 MINI_CLKREQ_L

## USB

7 USB2_LT_P
MAKE_BASE=TRUE
NET_PHYSICAL_TYPE=USB
NET_SPACING_TYPE=USB
LEFT_USB_P 8
MAX_EXPOSED_LENGTH=6MM
7 USB2_LT_N
MAKE_BASE=TRUE
NET_PHYSICAL_TYPE=USB
NET_SPACING_TYPE=USB
LEFT_USB_N 8
MAX_EXPOSED_LENGTH=6MM
7 LTUSB_OC_L
MAKE_BASE=TRUE
LEFT_USB_OC_L 8

## SMBUS

7 SMBUS_SMC_SCL
MAKE_BASE=TRUE
=SMBUS_TMPSNSR_SCL 9
=SMBUS_MINI_SCL 5
MAKE_BASE=TRUE

7 SMBUS_SMC_SDA
MAKE_BASE=TRUE
=SMBUS_TMPSNSR_SDA 9
=SMBUS_MINI_SDA 5
MAKE_BASE=TRUE

7 SMBUS_SB_SCL
MAKE_BASE=TRUE
=SMBUS_EXCARD_SCL 6
7 SMBUS_SB_SDA
MAKE_BASE=TRUE
=SMBUS_EXCARD_SDA 6

## POWER MANAGEMENT

7 LIO_S3_EN
MAKE_BASE=TRUE
=S3_REG_EN 16

7 PM_SLP_S3_LS5V
MAKE_BASE=TRUE
=LIO_P3V3S0_EN_L 16
=LIO_P5VS0_EN_L 16

## BATTERY

ZT0900
3P2R2P7

15 =PPBATTPOS_G3H_LIO_CONN
BATT_POS
MAKE_BASE=TRUE
MIN_LINE_WIDTH=0.6mm
MIN_NECK_WIDTH=0.25mm
=BATT_POS 17

15 =PPBATTNEG_G3H_LIO_CONN
=BATT_NEG IS ALIASED TO GND ON PAGE 15
THEREFORE CONSTRAINTS HAVE BEEN REMOVED.
=BATT_NEG 17

## Backlight

19 =BKLT_EN
LCDBKLT_PWREN 7
MAKE_BASE=TRUE
19 =BKLT_PLT_RST_L
PLT_RESET_L 5 6 7
MAKE_BASE=TRUE
19 =BKLT_PWM
LCDBKLT_PWM_UNBUF 7
MAKE_BASE=TRUE

# Aliases

SYNC_MASTER=(Master) SYNC_DATE=(Master)


NOTICE OF PROPRIETARY PROPERTY

THE INFORMATION CONTAINED HEREIN IS THE PROPRIETARY PROPERTY OF APPLE COMPUTER, INC. THE POSSESSOR AGREES TO THE FOLLOWING

I TO MAINTAIN THE DOCUMENT IN CONFIDENCE
II NOT TO REPRODUCE OR COPY IT
III NOT TO REVEAL OR PUBLISH IN WHOLE OR PART


APPLE INC.

| SIZE | DRAWING NUMBER | REV. |
|---|---|---|
| D | 051-7447 | 9.0.0 |
| SCALE NONE | SHT 4 | OF 23 |

www.laptop-schematics.com

# PCI-EXPRESS MINI CARD CONNECTOR

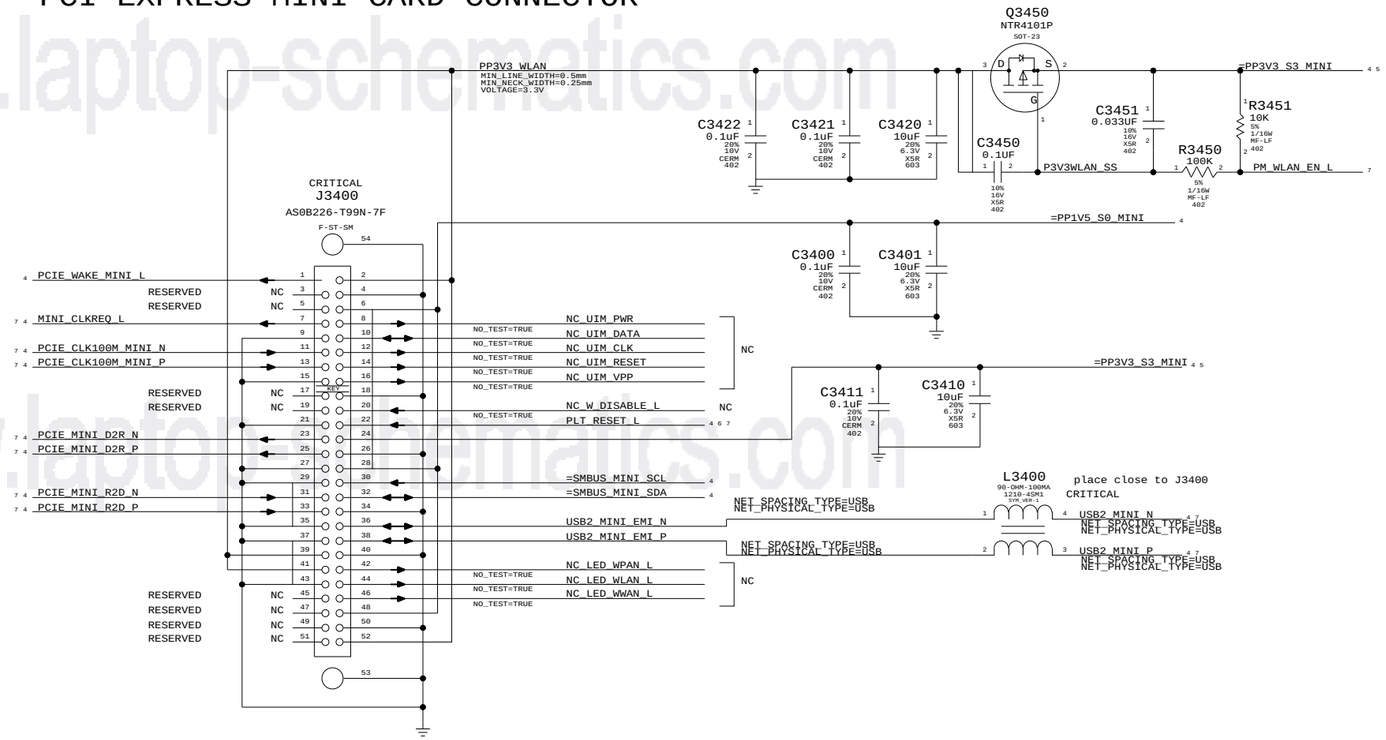


www.laptop-schematics.com

PCI-E MiniCard Connector

SYNC_MASTER=(Master) SYNC_DATE=(Master)

NOTICE OF PROPRIETARY PROPERTY

THE INFORMATION CONTAINED HEREIN IS THE PROPRIETARY PROPERTY OF APPLE COMPUTER, INC. THE POSSESSOR AGREES TO THE FOLLOWING

I TO MAINTAIN THE DOCUMENT IN CONFIDENCE

II NOT TO REPRODUCE OR COPY IT

III NOT TO REVEAL OR PUBLISH IN WHOLE OR PART

APPLE INC.

| SIZE | DRAWING NUMBER | REV. |
|---|---|---|
| D | 051-7447 | 9.0.0 |
| SCALE NONE | SHT 5 | OF 23 |

# EXPRESSCARD/34 TOP MOUNT CONNECTOR

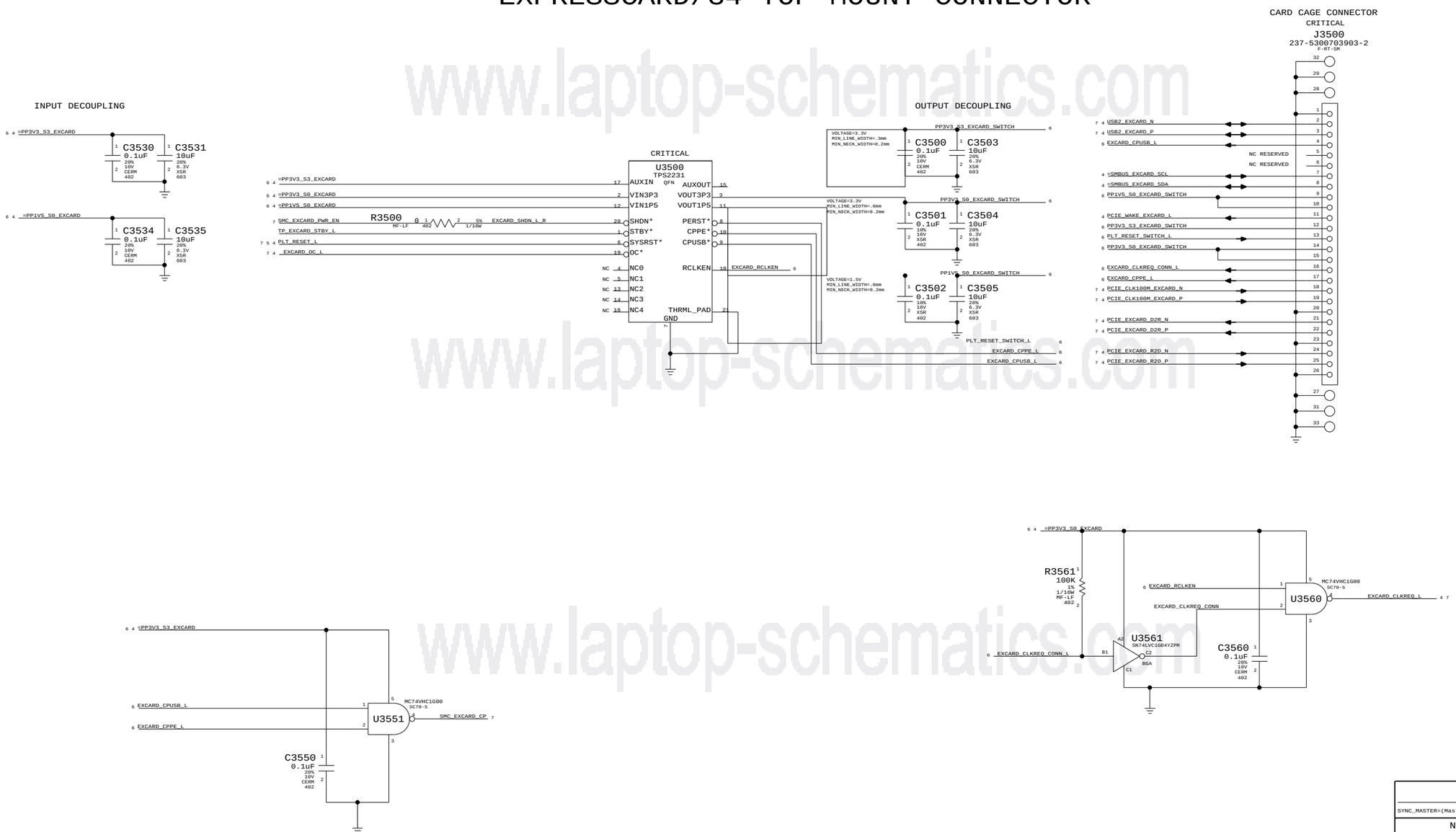


www.laptop-schematics.com

ExpressCard Connector

SYNC_MASTER=(Master) SYNC_DATE=(Master)

NOTICE OF PROPRIETARY PROPERTY

THE INFORMATION CONTAINED HEREIN IS THE PROPRIETARY PROPERTY OF APPLE COMPUTER, INC. THE POSSESSOR AGREES TO THE FOLLOWING

I TO MAINTAIN THE DOCUMENT IN CONFIDENCE

II NOT TO REPRODUCE OR COPY IT

III NOT TO REVEAL OR PUBLISH IN WHOLE OR PART

APPLE INC.

| SIZE | DRAWING NUMBER | REV. |
|---|---|---|
| D | 051-7447 | 9.0.0 |
| SCALE NONE | SHT 6 | OF 23 |

# Left I/O Board Connector

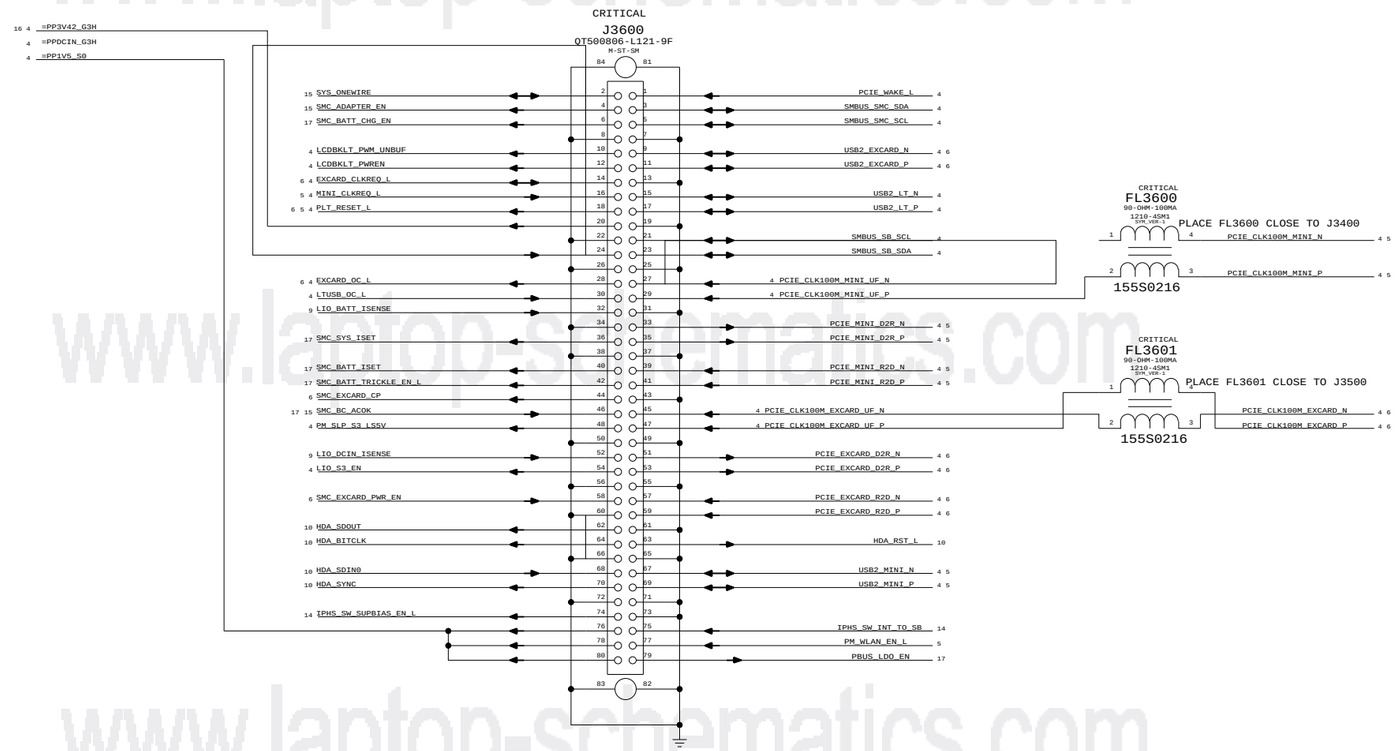


www.laptop-schematics.com

MLB I/O Board Connector

SYNC_MASTER=(Master) SYNC_DATE=(Master)

NOTICE OF PROPRIETARY PROPERTY

THE INFORMATION CONTAINED HEREIN IS THE PROPRIETARY PROPERTY OF APPLE COMPUTER, INC. THE POSSESSOR AGREES TO THE FOLLOWING

I TO MAINTAIN THE DOCUMENT IN CONFIDENCE

II NOT TO REPRODUCE OR COPY IT

III NOT TO REVEAL OR PUBLISH IN WHOLE OR PART

APPLE INC.

| SIZE | DRAWING NUMBER | REV. |
|---|---|---|
| D | 051-7447 | 9.0.0 |

SCALE NONE SHT 7 OF 23

www.laptop-schematics.com

# LEFT USB PORT

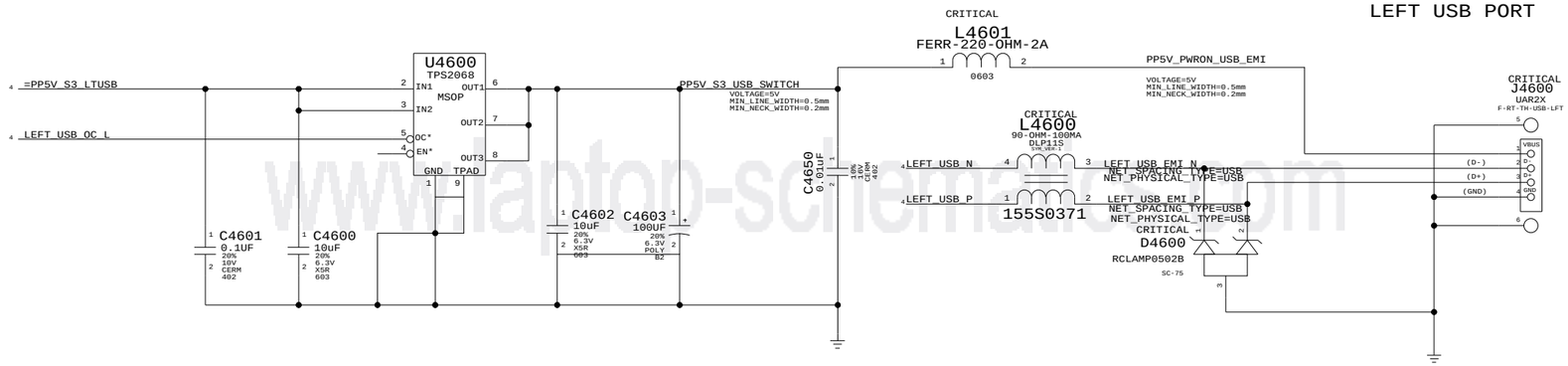


PUT L4600, L4601, ACROSS THE MOAT

www.laptop-schematics.com

Left USB Port

SYNC_MASTER=(Master) SYNC_DATE=(Master)

NOTICE OF PROPRIETARY PROPERTY

THE INFORMATION CONTAINED HEREIN IS THE PROPRIETARY PROPERTY OF APPLE COMPUTER, INC. THE POSSESSOR AGREES TO THE FOLLOWING

I TO MAINTAIN THE DOCUMENT IN CONFIDENCE

II NOT TO REPRODUCE OR COPY IT

III NOT TO REVEAL OR PUBLISH IN WHOLE OR PART

APPLE INC.

| SIZE | DRAWING NUMBER | REV. |
|---|---|---|
| D | 051-7447 | 9.0.0 |

SCALE NONE

SHT 8 OF 23

## Battery Current Sense

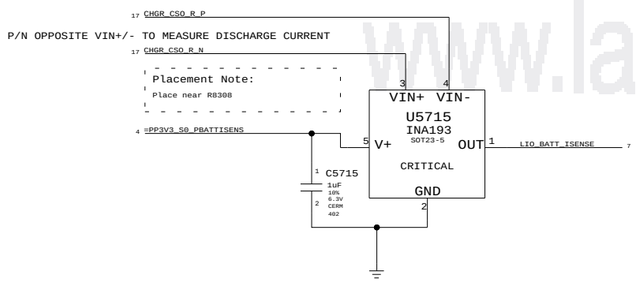


## DCIn Current Sense

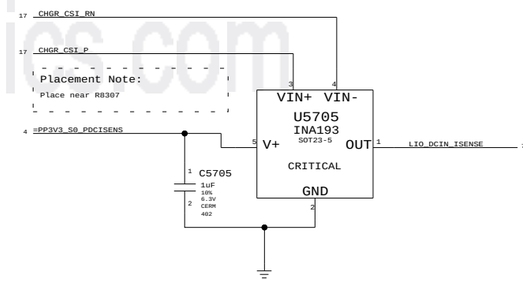


www.laptop-schematics.com

## Battery Charger Thermal Sensor

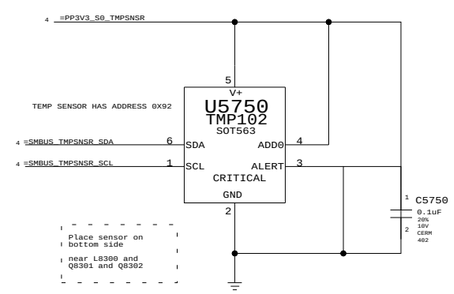


Current & Thermal Sensors

SYNC_MASTER=(Master) SYNC_DATE=(Master)

NOTICE OF PROPRIETARY PROPERTY

THE INFORMATION CONTAINED HEREIN IS THE PROPRIETARY PROPERTY OF APPLE COMPUTER, INC. THE POSSESSOR AGREES TO THE FOLLOWING

I TO MAINTAIN THE DOCUMENT IN CONFIDENCE

II NOT TO REPRODUCE OR COPY IT

III NOT TO REVEAL OR PUBLISH IN WHOLE OR PART

APPLE INC.

| SIZE | DRAWING NUMBER | REV. |
|---|---|---|
| D | 051-7447 | 9.0.0 |

| SCALE | SHT | OF |
|---|---|---|
| NONE | 9 | 23 |

# AUDIO CODEC

APPLE P/N 353S1527

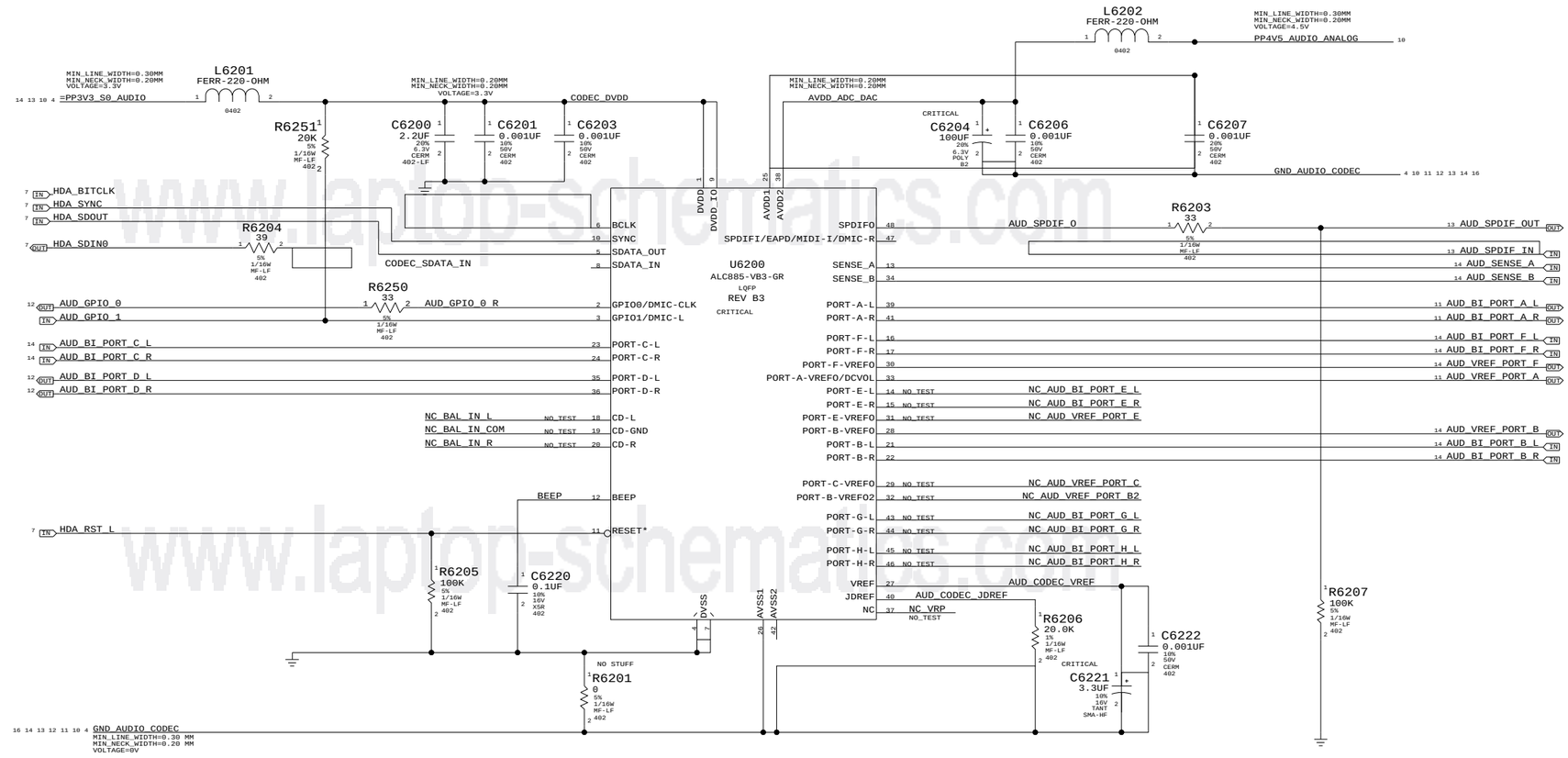


# AUDIO 4.5V REGULATOR

APPLE P/N 353S1576

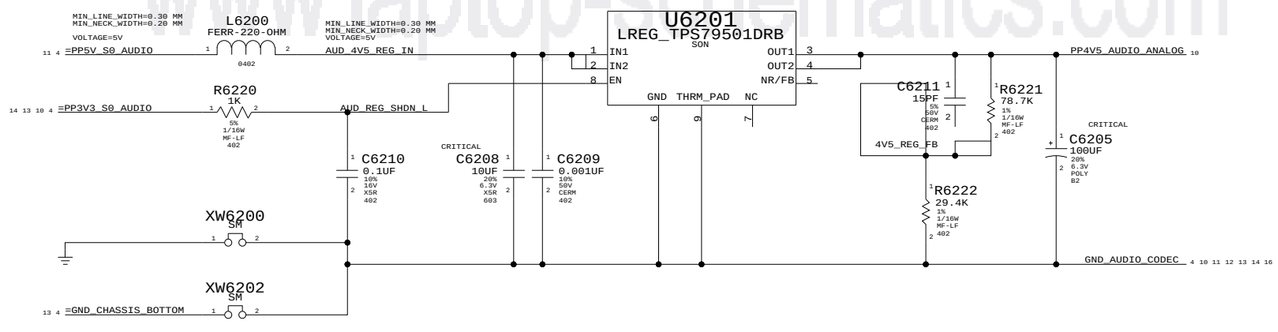


## AUDIO:CODEC

SYNC_MASTER=LENGO_M87_AUDIO SYNC_DATE=10/05/2007


NOTICE OF PROPRIETARY PROPERTY

THE INFORMATION CONTAINED HEREIN IS THE PROPRIETARY PROPERTY OF APPLE COMPUTER, INC. THE POSSESSOR AGREES TO THE FOLLOWING

I TO MAINTAIN THE DOCUMENT IN CONFIDENCE

II NOT TO REPRODUCE OR COPY IT

III NOT TO REVEAL OR PUBLISH IN WHOLE OR PART


APPLE INC.

| SIZE | DRAWING NUMBER | REV. |
|---|---|---|
| D | 051-7447 | 9.0.0 |

SCALE NONE SHT 10 OF 23

www.laptop-schematics.com

# Headphone Amplifier (MAX9724A)
APN:353S1637
VOLTAGE GAIN:1.53

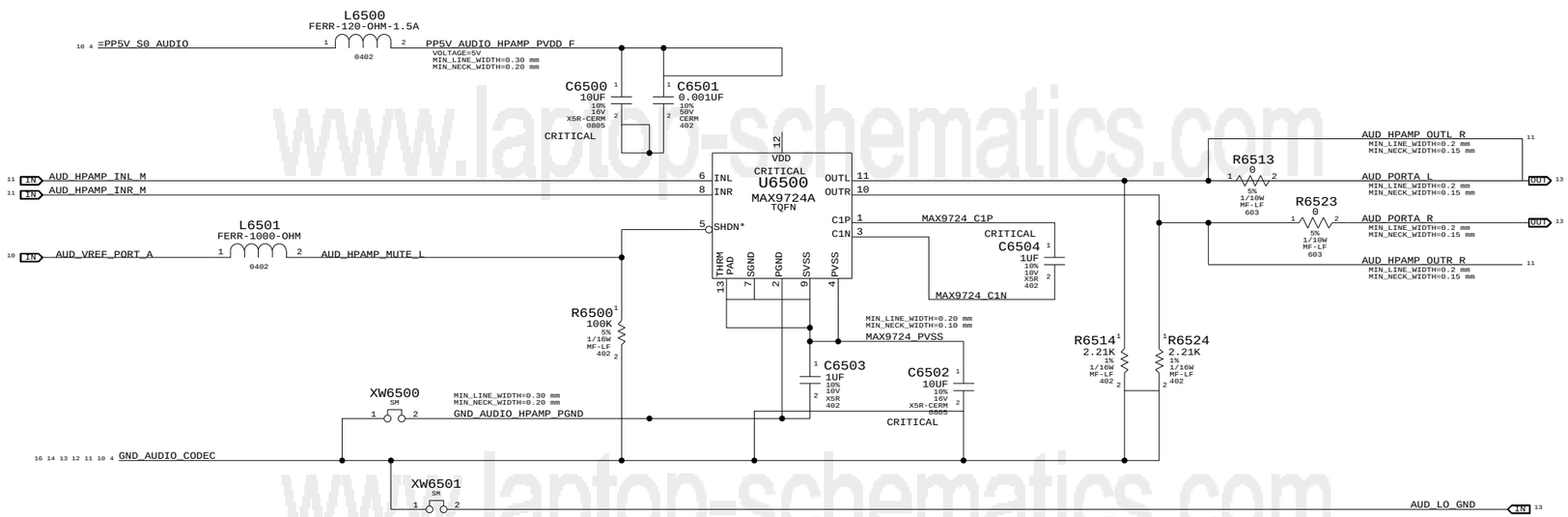


# 2nd Order DAC Filter
HP:3.52 HZ LP:39 KHZ

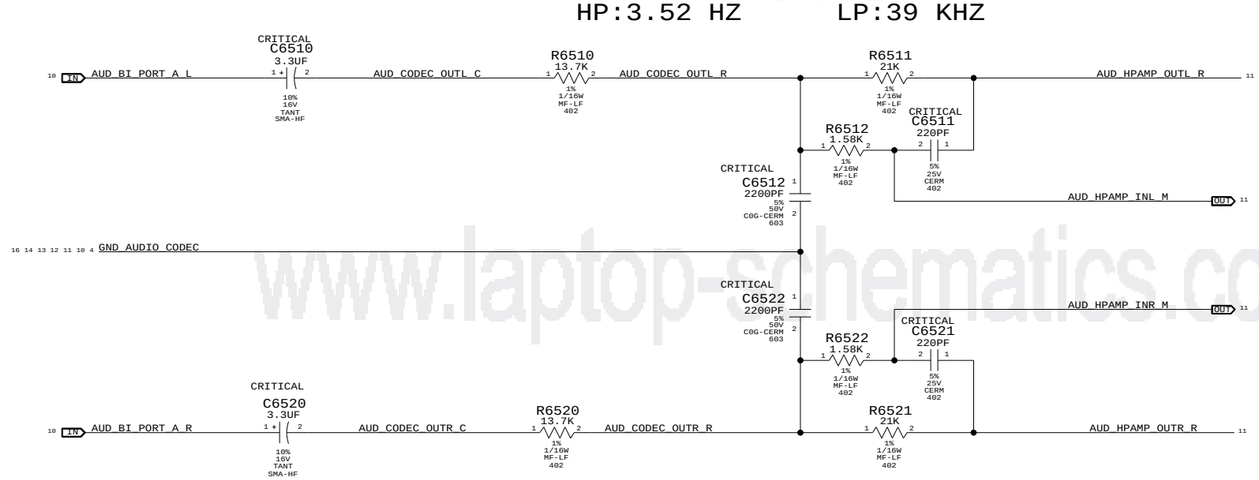


## AUDIO: HEADPHONE AMP

SYNC_MASTER=LENGO_M87_AUDIO SYNC_DATE=10/05/2007


NOTICE OF PROPRIETARY PROPERTY

THE INFORMATION CONTAINED HEREIN IS THE PROPRIETARY PROPERTY OF APPLE COMPUTER, INC. THE POSSESSOR AGREES TO THE FOLLOWING

I TO MAINTAIN THE DOCUMENT IN CONFIDENCE

II NOT TO REPRODUCE OR COPY IT

III NOT TO REVEAL OR PUBLISH IN WHOLE OR PART


APPLE INC.

| SIZE | DRAWING NUMBER | REV. |
|---|---|---|
| D | 051-7447 | 9.0.0 |
| SCALE NONE | SHT 11 OF 23 | |

www.laptop-schematics.com

2X MONO SPEAKER AMPLIFIERS (MAX9705B)

APN: 353S1595

GAIN = 12DB

79Hz < FC < 132Hz

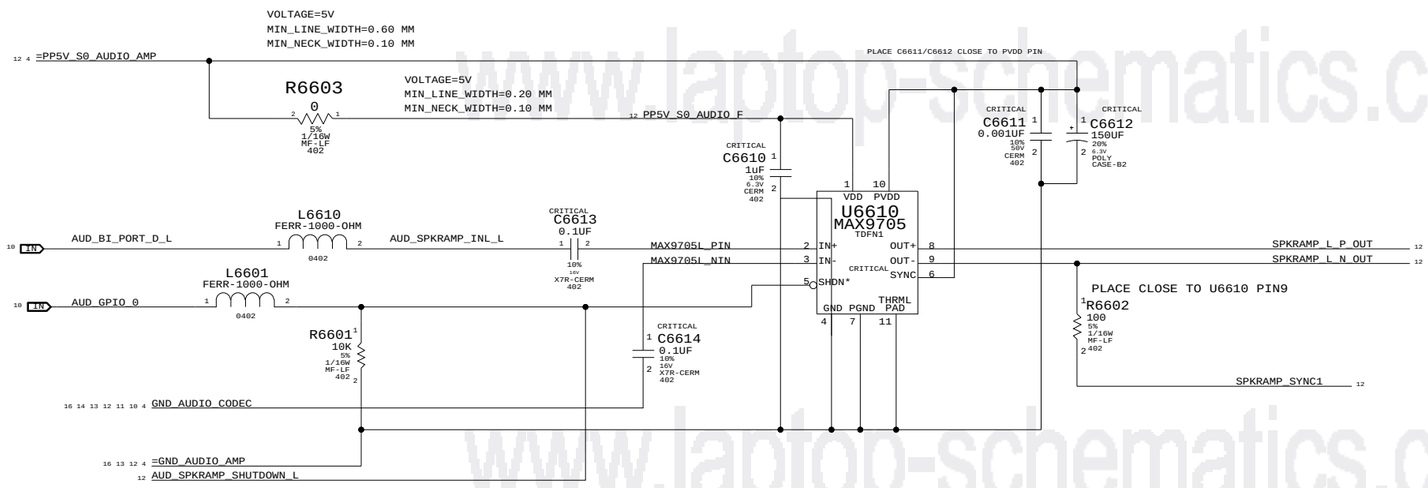


FANCY SPEAKER TESTPOINTS

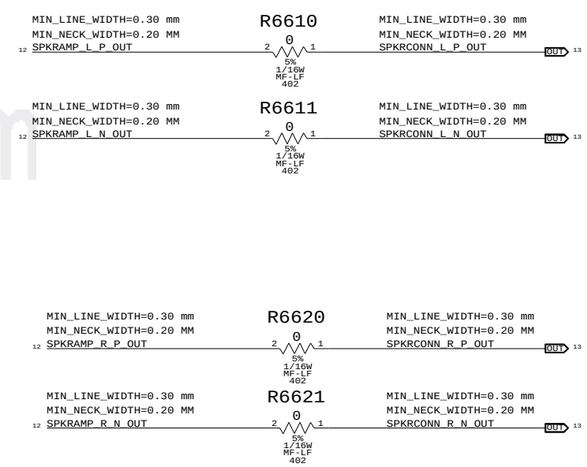


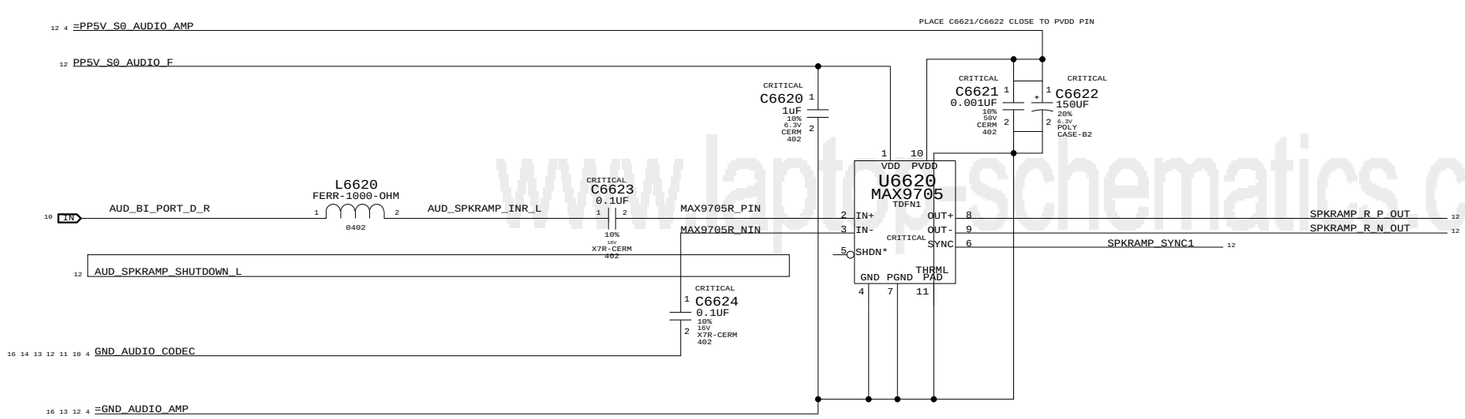


www.laptop-schematics.com

# AUDIO:SPEAKER AMP

SYNC_MASTER=LENGO_M87_AUDIO SYNC_DATE=10/05/2007

NOTICE OF PROPRIETARY PROPERTY

THE INFORMATION CONTAINED HEREIN IS THE PROPRIETARY PROPERTY OF APPLE COMPUTER, INC. THE POSSESSOR AGREES TO THE FOLLOWING

I TO MAINTAIN THE DOCUMENT IN CONFIDENCE

II NOT TO REPRODUCE OR COPY IT

III NOT TO REVEAL OR PUBLISH IN WHOLE OR PART

APPLE INC.

| SIZE | DRAWING NUMBER | REV. |
|---|---|---|
| D | 051-7447 | 9.0.0 |
| SCALE NONE | SHT 12 OF 23 | |

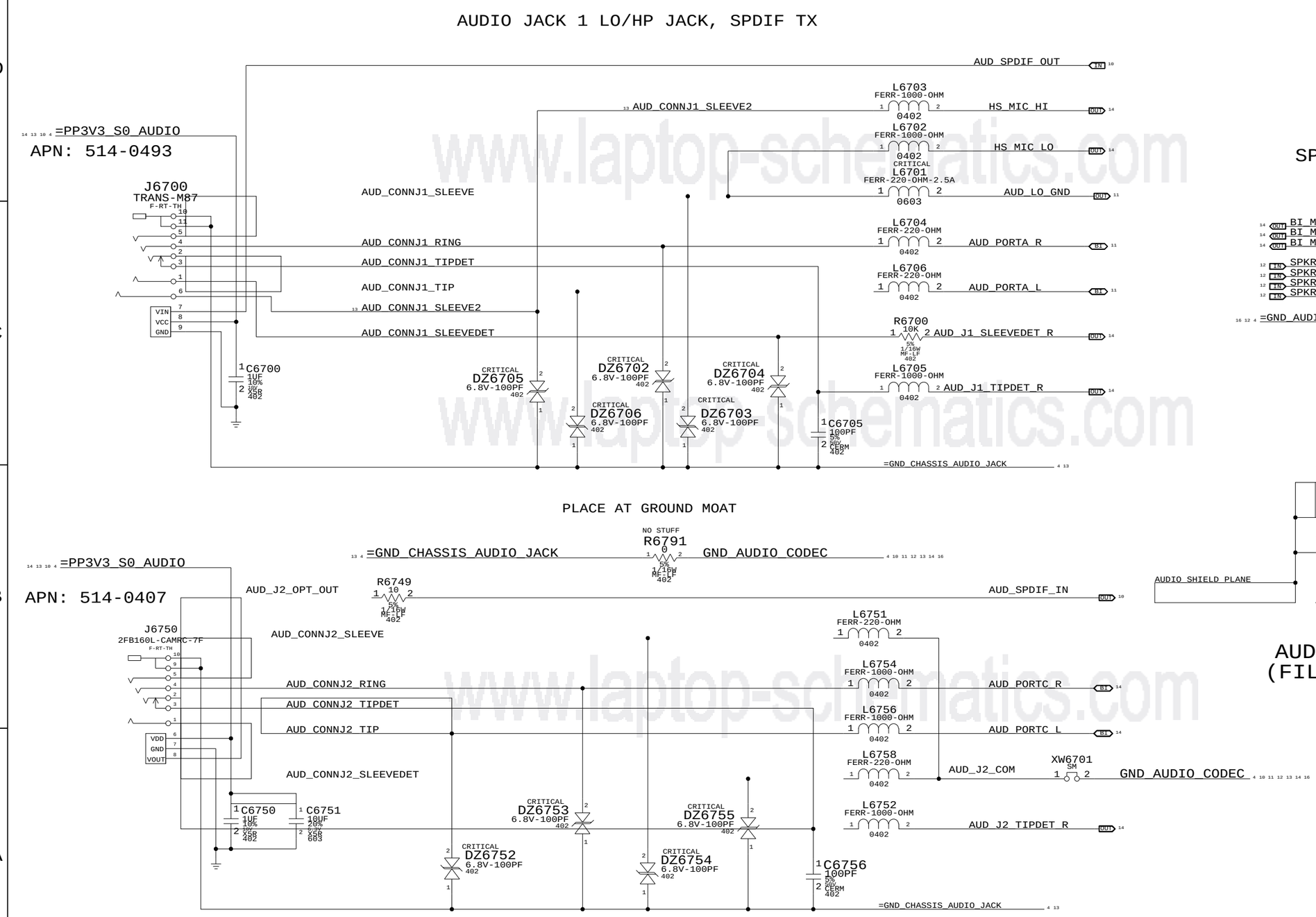


www.laptop-schematics.com

# AUDIO: JACKS

SYNC_MASTER=LENGO_M87_AUDIO SYNC_DATE=10/05/2007

NOTICE OF PROPRIETARY PROPERTY

THE INFORMATION CONTAINED HEREIN IS THE PROPRIETARY PROPERTY OF APPLE COMPUTER, INC. THE POSSESSOR AGREES TO THE FOLLOWING

I TO MAINTAIN THE DOCUMENT IN CONFIDENCE
II NOT TO REPRODUCE OR COPY IT
III NOT TO REVEAL OR PUBLISH IN WHOLE OR PART

APPLE INC.

| SIZE | DRAWING NUMBER | REV. |
|---|---|---|
| D | 051-7447 | 9.0.0 |

SCALE NONE SHT 13 OF 23

## CODEC OUTPUT SIGNAL PATHS

| FUNCTION | VOLUME | CONVERTER | PIN COMPLEX | MUTE CONTROL | DET ASSIGNMENT |
|---|---|---|---|---|---|
| HP/LINE OUT | 0X0D (15) | 0X03 (3) | 0X15 (21,A) | VREF_A | 0X15 (21,A) |
| SPEAKER | 0X26 (38) | 0X25 (37) | 0X14 (20,D) | GPIO_0 | N/A |
| SPDIF OUT | N/A | 0X06 (6) | 0x1E (SPDIF OUT) | N/A | 0X1B (27,E) |

## CODEC INPUT SIGNAL PATHS

| FUNCTION | MIXER(INPUT) | CONVERTER | PIN COMPLEX | VREF | DET ASSIGNMENT |
|---|---|---|---|---|---|
| LINE IN | 0X23 (35) | 0X08 (8) | 0X1A (26,C) | N/A | 0X1A (26,C) |
| SPDIF IN | N/A | 0X0A (10) | 0x1F (SPDIF IN) | N/A | N/A |
| MIC (BUILT IN) | 0X24 (36) | 0X07 (7) | 0X18 (24,B) | B (80%) | N/A |
| MIC (HEADSET) | 0X24 (36) | 0X07 (7) | 0X19 (25,F) | F (80%) | SOUTHBRIDGE |

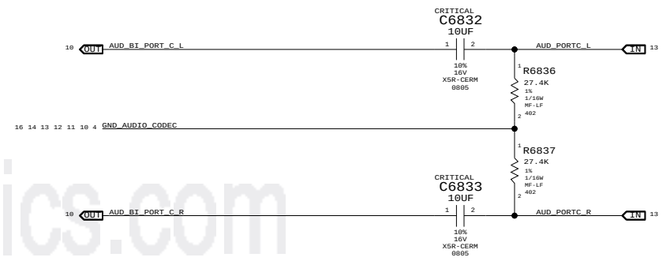


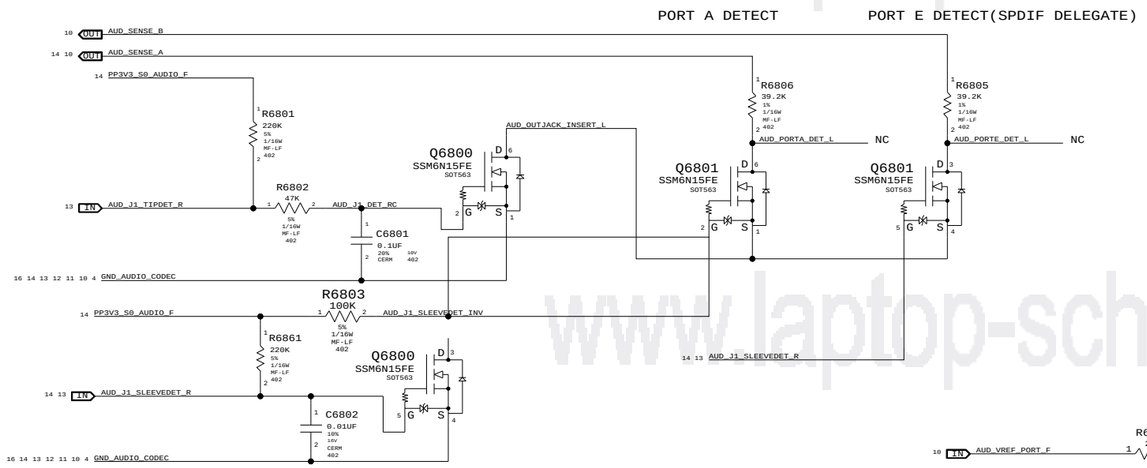


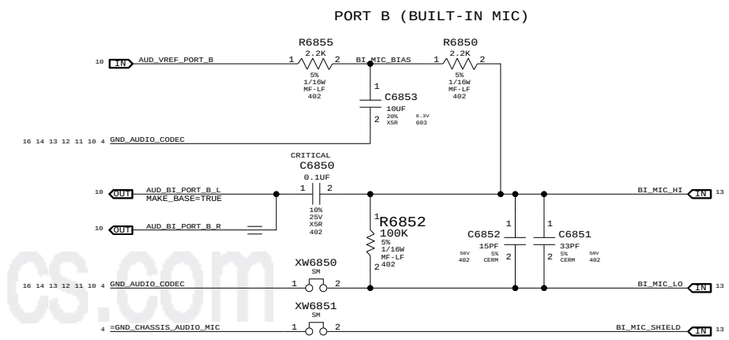


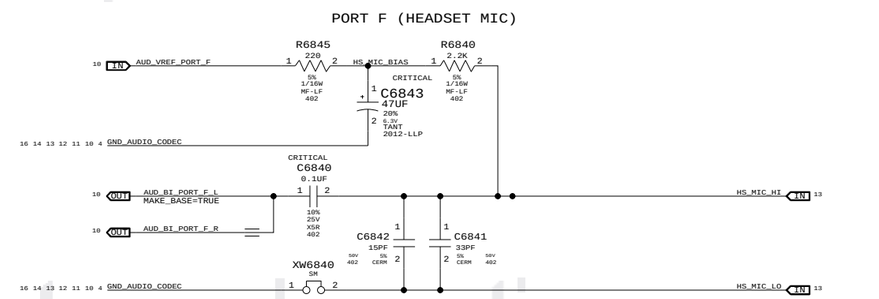


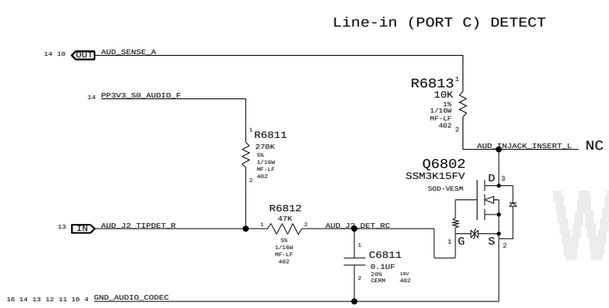


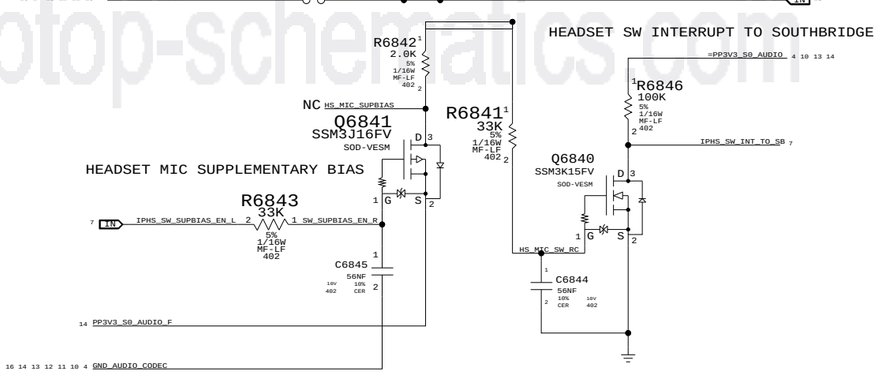


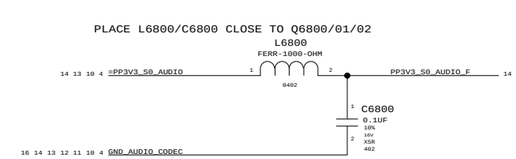


AUDIO: JACK TRANSLATORS

SYNC_MASTER=LENGO_M87_AUDIO SYNC_DATE=10/05/2007


NOTICE OF PROPRIETARY PROPERTY

THE INFORMATION CONTAINED HEREIN IS THE PROPRIETARY PROPERTY OF APPLE COMPUTER, INC. THE POSSESSOR AGREES TO THE FOLLOWING

I TO MAINTAIN THE DOCUMENT IN CONFIDENCE

II NOT TO REPRODUCE OR COPY IT

III NOT TO REVEAL OR PUBLISH IN WHOLE OR PART


APPLE INC.

| SIZE | DRAWING NUMBER | REV. |
|---|---|---|
| D | 051-7447 | 9.0.0 |

SCALE NONE SHT 14 OF 23

www.laptop-schematics.com

## DC Power Jack

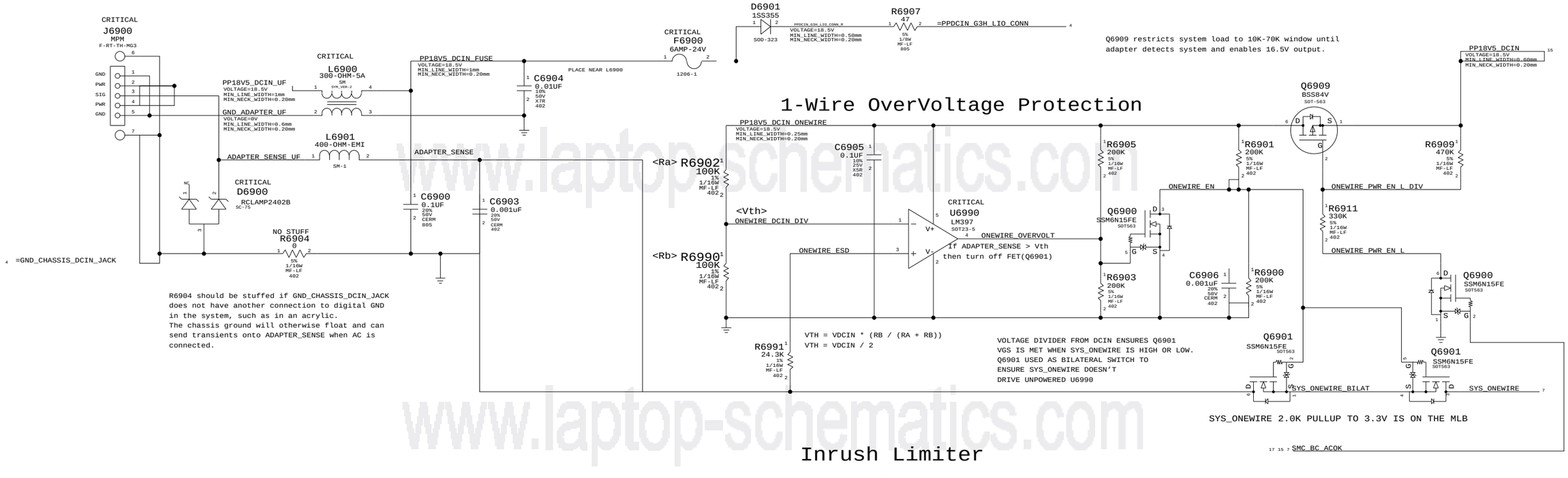


www.laptop-schematics.com

DC-In & Battery Connectors

SYNC_MASTER=(Master) SYNC_DATE=(Master)

NOTICE OF PROPRIETARY PROPERTY

THE INFORMATION CONTAINED HEREIN IS THE PROPRIETARY PROPERTY OF APPLE COMPUTER, INC. THE POSSESSOR AGREES TO THE FOLLOWING

I TO MAINTAIN THE DOCUMENT IN CONFIDENCE

II NOT TO REPRODUCE OR COPY IT

III NOT TO REVEAL OR PUBLISH IN WHOLE OR PART

APPLE INC.

| SIZE | DRAWING NUMBER | REV. |
|---|---|---|
| D | 051-7447 | 9.0.0 |

SCALE NONE | SHT 15 OF 23

# 5V/3.3V POWER SUPPLY

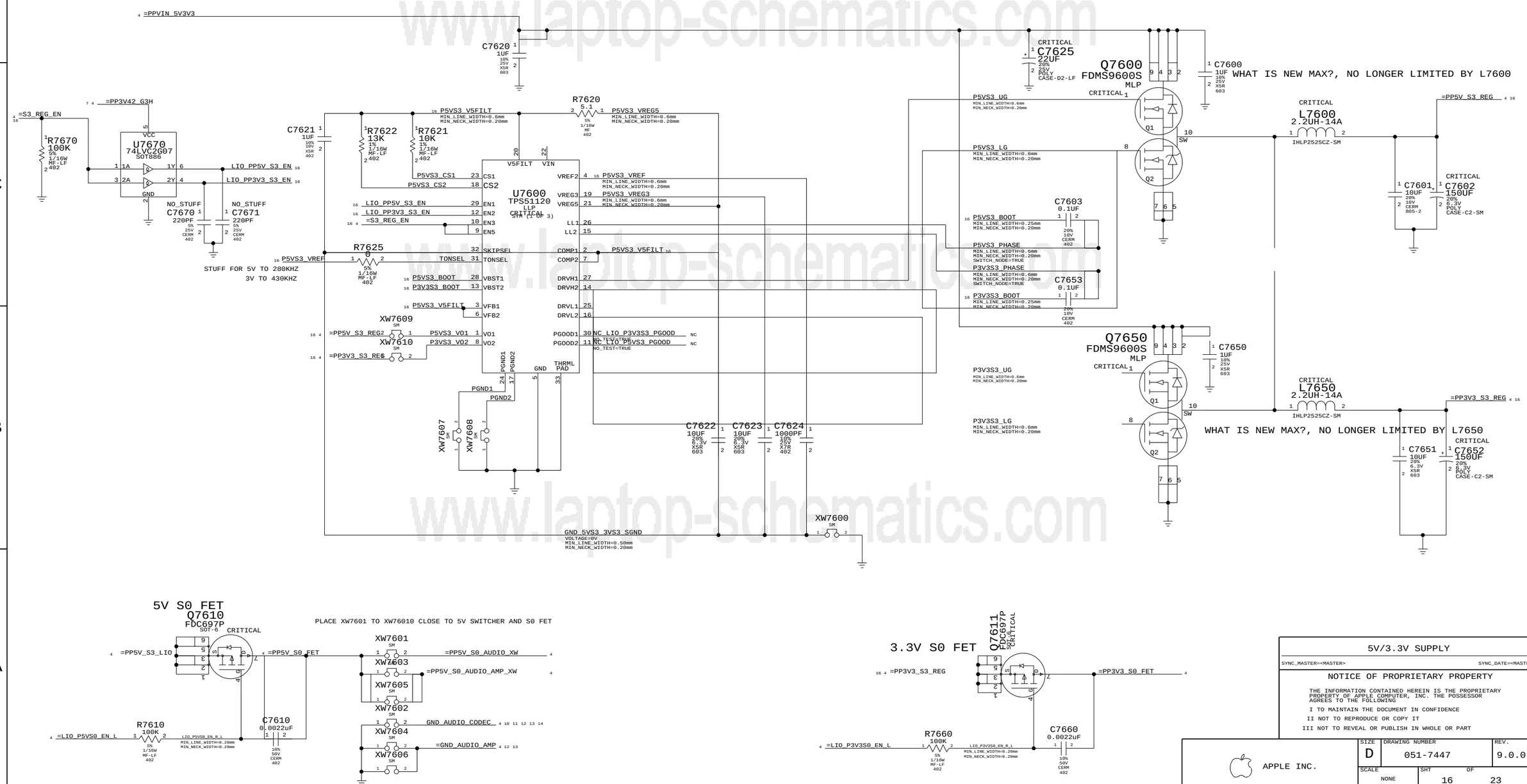

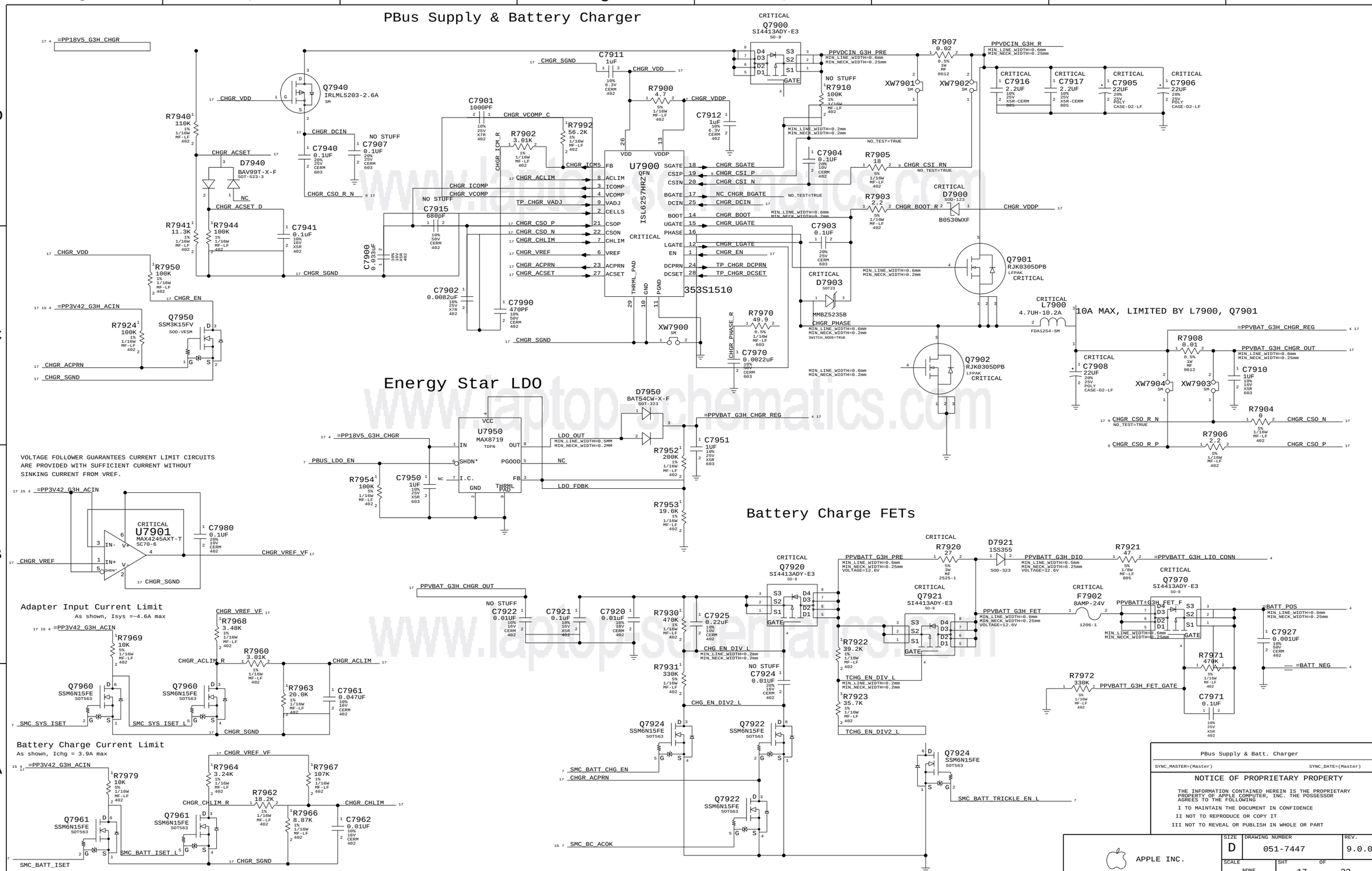
PBus Supply & Battery Charger
Energy Star LDO
Battery Charge FETs
Adapter Input Current Limit
As shown, Isys =~4.6A max
Battery Charge Current Limit
As shown, Ichg = 3.9A max
VOLTAGE FOLLOWER GUARANTEES CURRENT LIMIT CIRCUITS ARE PROVIDED WITH SUFFICIENT CURRENT WITHOUT SINKING CURRENT FROM VREF.
10A MAX, LIMITED BY L7900, Q7901
U7900 ISL6257HRZ QFN
U7950 MAX8719 TDFN
U7901 MAX4245AXT-T SC70-6
Q7900 SI4413ADY-E3 SO-8
Q7970 SI4413ADY-E3 SO-8
Q7921 SI4413ADY-E3 SO-8
Q7940 IRLML5203-2.6A SM
Q7901 RJK0305DPB LFPAK
Q7902 RJK0305DPB LFPAK
D7950 BAT54CW-X-F SOT-323
D7921 1SS355 SOD-323
D7900 B0530WXF SOD-123
D7903 SOT23 MMBZ5235B
D7940 BAV99T-X-F SOT-523-3
Q7960 SSM6N15FE SOT563
Q7961 SSM6N15FE SOT563
Q7922 SSM6N15FE SOT563
Q7924 SSM6N15FE SOT563
Q7950 SSM3K15FV SOD-VESM
L7900 4.7UH-10.2A FDA1254-SM
F7902 8AMP-24V 1206-1
=PP18V5_G3H_CHGR
=PP3V42_G3H_ACIN
=PPVBAT_G3H_CHGR_REG
PPVBAT_G3H_CHGR_OUT
=PPVBATT_G3H_LIO_CONN
=BATT_POS
=BATT_NEG
PPVDCIN_G3H_R
PPVDCIN_G3H_PRE
CHGR_VDD
CHGR_VDDP
CHGR_SGND
CHGR_SGATE
CHGR_CSI_P
CHGR_CSI_N
CHGR_CSI_RN
NC_CHGR_BGATE
CHGR_DCIN
CHGR_BOOT
CHGR_UGATE
CHGR_LGATE
CHGR_EN
TP_CHGR_DCPRN
TP_CHGR_DCSET
CHGR_PHASE
CHGR_ACLIM
CHGR_ICOMP
CHGR_VCOMP
TP_CHGR_VADJ
CHGR_CSO_P
CHGR_CSO_N
CHGR_CHLIM
CHGR_VREF
CHGR_ACPRN
CHGR_ACSET
CHGR_VREF_VF
CHGR_CSO_R_N
CHGR_CSO_R_P
PPVBATT_G3H_PRE
PPVBATT_G3H_DIO
PPVBATT_G3H_FET
PPVBATT_G3H_FET_F
PPVBATT_G3H_FET_GATE
TCHG_EN_DIV_L
TCHG_EN_DIV2_L
CHG_EN_DIV_L
CHG_EN_DIV2_L
SMC_SYS_ISET
SMC_SYS_ISET_L
SMC_BATT_ISET
SMC_BATT_ISET_L
SMC_BATT_CHG_EN
SMC_BATT_TRICKLE_EN_L
SMC_BC_ACOK
PBus Supply & Batt. Charger
SYNC_MASTER=(Master)
SYNC_DATE=(Master)
NOTICE OF PROPRIETARY PROPERTY
THE INFORMATION CONTAINED HEREIN IS THE PROPRIETARY PROPERTY OF APPLE COMPUTER, INC. THE POSSESSOR AGREES TO THE FOLLOWING
I TO MAINTAIN THE DOCUMENT IN CONFIDENCE
II NOT TO REPRODUCE OR COPY IT
III NOT TO REVEAL OR PUBLISH IN WHOLE OR PART
APPLE INC.
SIZE D
DRAWING NUMBER 051-7447
REV. 9.0.0
SCALE NONE
SHT 17 OF 23

# Inverter Connector

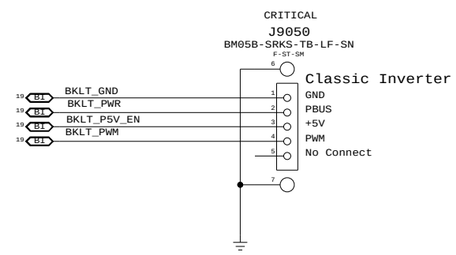


Inverter Connector

SYNC_MASTER=SPLIT_INVERTER SYNC_DATE=12/06/2006

NOTICE OF PROPRIETARY PROPERTY

THE INFORMATION CONTAINED HEREIN IS THE PROPRIETARY PROPERTY OF APPLE COMPUTER, INC. THE POSSESSOR AGREES TO THE FOLLOWING

I TO MAINTAIN THE DOCUMENT IN CONFIDENCE

II NOT TO REPRODUCE OR COPY IT

III NOT TO REVEAL OR PUBLISH IN WHOLE OR PART

APPLE INC.

| SIZE | DRAWING NUMBER | REV. |
|---|---|---|
| D | 051-7447 | 9.0.0 |

| SCALE | SHT | OF |
|---|---|---|
| NONE | 18 | 23 |

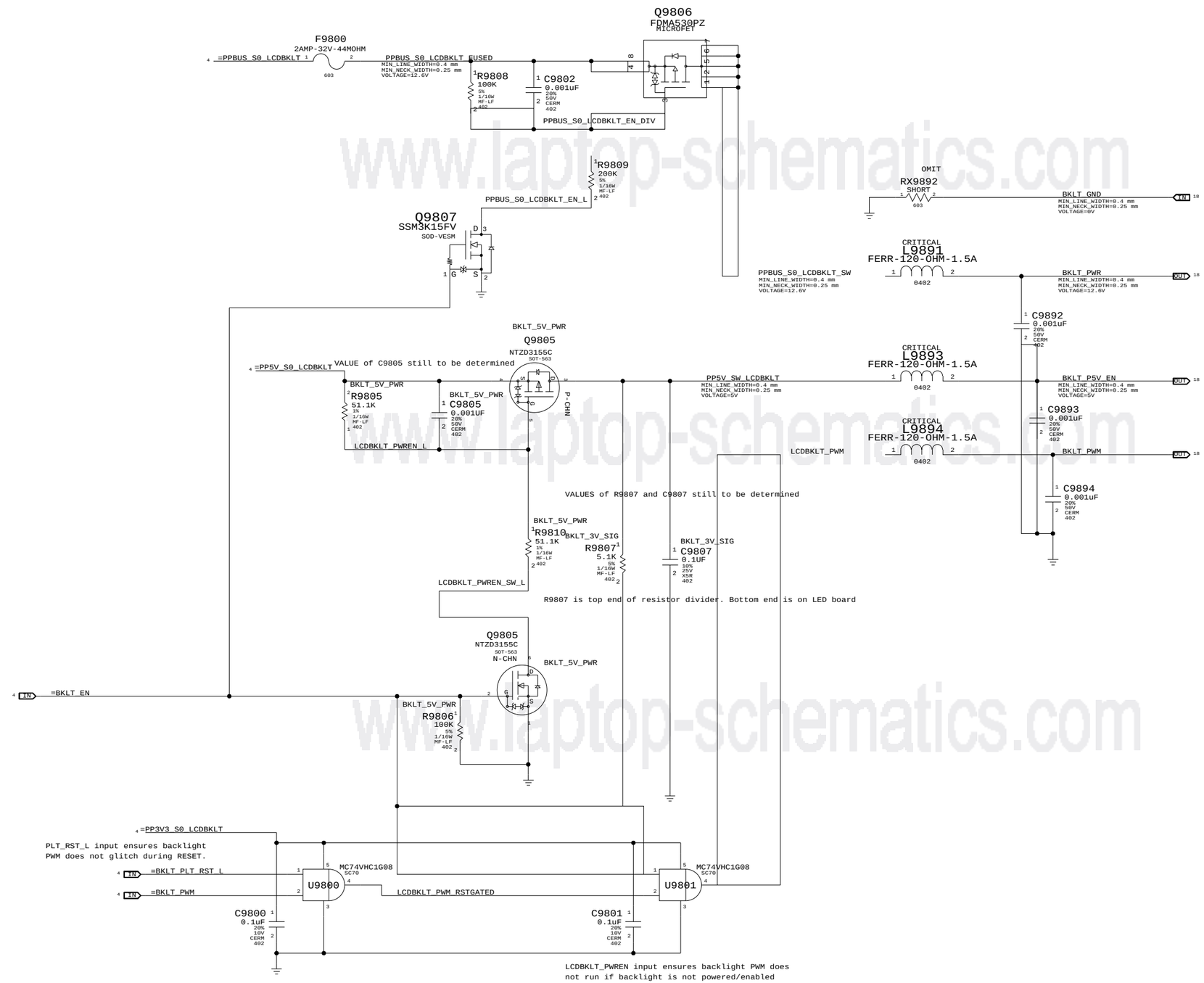


www.laptop-schematics.com

# LCD Backlight Support

SYNC_MASTER=M88_MLB SYNC_DATE=07/05/2007

NOTICE OF PROPRIETARY PROPERTY

THE INFORMATION CONTAINED HEREIN IS THE PROPRIETARY PROPERTY OF APPLE COMPUTER, INC. THE POSSESSOR AGREES TO THE FOLLOWING

I TO MAINTAIN THE DOCUMENT IN CONFIDENCE

II NOT TO REPRODUCE OR COPY IT

III NOT TO REVEAL OR PUBLISH IN WHOLE OR PART

APPLE INC.

| SIZE | DRAWING NUMBER | REV. |
|---|---|---|
| D | 051-7447 | 9.0.0 |
| SCALE NONE | SHT 19 | OF 23 |

Title: Basenet Report
Design: lio
Date: Oct 5 17:43:38 2007

Base nets and synonyms for lio_lib.LIO(@lio_lib.lio(sch_1))

| Base Signal | Synonyms | Location([Zone][dir]) |
|---|---|---|
| 4V5_REG_FB | 4V5_REG_FB - @lio_lib.LIO | 10A4 |
| =BATT_POS | =BATT_POS - @lio_lib.LIO | 4C1 17B1 |
| | =PPBATTPOS_G3H_LIO_CONN - @lio_lib.LIO | 4D3 15A3 |
| | BATT_POS - @lio_lib.LIO | 4D1 |
| | =PPBATTPOS_G3H_LIO_CONN - @lio_lib.LIO | 4D3 15A3 |
| =BKLT_EN | =BKLT_EN - @lio_lib.LIO | 4C3 19B8 |
| | LCDBKLT_PWREN - @lio_lib.LIO | 4C1 7C6 |
| =BKLT_PLT_RST_L | =BKLT_PLT_RST_L - @lio_lib.LIO | 4C3 19A7 |
| | PLT_RESET_L - @lio_lib.LIO | 4C1 5C3 6C7 7C6 |
| =BKLT_PPBUS_S0_LCDBKLT_EN | =BKLT_PPBUS_S0_LCDBKLT_EN - @lio_lib.LIO | 4B6 |
| | =PP5V_S0_FET - @lio_lib.LIO | 4B8 16A7 |
| | =PP5V_S0_LCDBKLT - @lio_lib.LIO | 4B6 19C7 |
| | PP5V_S0_FET - @lio_lib.LIO | 4B6 |
| | =PP5V_S0_LCDBKLT - @lio_lib.LIO | 4B6 19C7 |
| | =PP5V_S0_FET - @lio_lib.LIO | 4B8 16A7 |
| =BKLT_PWM | =BKLT_PWM - @lio_lib.LIO | 4C3 19A7 |
| | LCDBKLT_PWM_UNBUF - @lio_lib.LIO | 4C1 7C6 |
| =GND_AUDIO | =GND_AUDIO - @lio_lib.LIO | 4B8 |
| | GND_AUDIO_CODEC - @lio_lib.LIO | 4B6 10A3 10B6 10D2 11B7 11C7 12A8 12C7 13A3 13B4 14A5 14A8 14A8 14B5 14B5 14B8 14C3 14C3 14C8 14D3 16A6 |
| | GND_AUDIO - @lio_lib.LIO | 4B6 |
| =GND_AUDIO_AMP | =GND_AUDIO_AMP - @lio_lib.LIO | 4B8 12A8 12C7 13C3 16A6 |
| | GND_AUDIO_AMP - @lio_lib.LIO | 4B6 |
| =GND_CHASSIS_AUDIO_JACK | =GND_CHASSIS_AUDIO_JACK - @lio_lib.LIO | 4B6 13A3 13B1 13B1 13B1 13B3 13B7 |
| | CHASSIS_GND1 - @lio_lib.LIO | 4B8 |
| =GND_CHASSIS_AUDIO_MIC | =GND_CHASSIS_AUDIO_MIC - @lio_lib.LIO | 4A6 14B3 |
| | CHASSIS_GND2 - @lio_lib.LIO | 4A8 |
| =GND_CHASSIS_BOTTOM | =GND_CHASSIS_BOTTOM - @lio_lib.LIO | 4A6 10A7 13B1 |
| | CHASSIS_GND4 - @lio_lib.LIO | 4A8 |
| =GND_CHASSIS_DCIN_JACK | =GND_CHASSIS_DCIN_JACK - @lio_lib.LIO | 4A6 15C8 |
| | CHASSIS_GND3 - @lio_lib.LIO | 4A7 |
| =LIO_P3V3S0_EN_L | =LIO_P3V3S0_EN_L - @lio_lib.LIO | 4D1 16A4 |
| | =LIO_P5VS0_EN_L - @lio_lib.LIO | 4D1 16A8 |
| | PM_SLP_S3_LS5V - @lio_lib.LIO | 4D3 7B6 |
| | =LIO_P5VS0_EN_L - @lio_lib.LIO | 4D1 16A8 |
| =PP1V5_S0 | =PP1V5_S0 - @lio_lib.LIO | 4C8 7C6 |
| | =PP1V5_S0_EXCARD - @lio_lib.LIO | 4C6 6C7 6C8 |
| | =PP1V5_S0_MINI - @lio_lib.LIO | 4C6 5C2 |
| | PP1V5_S0 - @lio_lib.LIO | 4C6 |
| | =PP1V5_S0_MINI - @lio_lib.LIO | 4C6 5C2 |
| | =PP1V5_S0_EXCARD - @lio_lib.LIO | 4C6 6C7 6C8 |
| =PP3V3_S0_AUDIO | =PP3V3_S0_AUDIO - @lio_lib.LIO | 4C6 10A7 10D7 13B8 13D8 14A3 14A8 |
| | =PP3V3_S0_EXCARD - @lio_lib.LIO | 4C6 6B4 6C7 |
| | =PP3V3_S0_FET - @lio_lib.LIO | 4C8 16A2 |
| | =PP3V3_S0_LCDBKLT - @lio_lib.LIO | 4C6 19A7 |
| | =PP3V3_S0_PDCISENS - @lio_lib.LIO | 4C6 9C4 |
| | =PP3V3_S0_TMPSNSR - @lio_lib.LIO | 4C6 9B5 |
| | =PP3V3_S0_PBATTISENS - @lio_lib.LIO | 4C6 9C7 |
| | PP3V3_S0_LIO - @lio_lib.LIO | 4C6 |
| | =PP3V3_S0_TMPSNSR - @lio_lib.LIO | 4C6 9B5 |
| | =PP3V3_S0_PDCISENS - @lio_lib.LIO | 4C6 9C4 |
| | =PP3V3_S0_PBATTISENS - @lio_lib.LIO | 4C6 9C7 |
| | =PP3V3_S0_LCDBKLT - @lio_lib.LIO | 4C6 19A7 |
| | =PP3V3_S0_FET - @lio_lib.LIO | 4C8 16A2 |
| | =PP3V3_S0_EXCARD - @lio_lib.LIO | 4C6 6B4 6C7 |
| =PP3V3_S3_EXCARD | =PP3V3_S3_EXCARD - @lio_lib.LIO | 4C6 6B8 6C7 6C8 |
| | =PP3V3_S3_REG - @lio_lib.LIO | 4C8 16A4 16B1 16B7 |
| | =PP3V3_S3_MINI - @lio_lib.LIO | 4C6 5C2 5D1 |
| | PP3V3_S3_LIO - @lio_lib.LIO | 4C6 |
| | =PP3V3_S3_REG - @lio_lib.LIO | 4C8 16A4 16B1 16B7 |
| | =PP3V3_S3_MINI - @lio_lib.LIO | 4C6 5C2 5D1 |
| =PP3V42_G3H | =PP3V42_G3H - @lio_lib.LIO | 4D8 7C6 16C8 |
| | =PP3V42_G3H_ACIN - @lio_lib.LIO | 4C6 15B8 17A8 17B8 17B8 17C8 |
| | PP3V42_G3H - @lio_lib.LIO | 4D6 |
| | =PP3V42_G3H_ACIN - @lio_lib.LIO | 4C6 15B8 17A8 17B8 17B8 17C8 |
| =PP5V_S0_AUDIO | =PP5V_S0_AUDIO - @lio_lib.LIO | 4B6 10A7 11D7 |
| | =PP5V_S0_AUDIO_XW - @lio_lib.LIO | 4B8 16A6 |
| | PP5V_S0_AUDIO - @lio_lib.LIO | 4B6 |
| | =PP5V_S0_AUDIO_XW - @lio_lib.LIO | 4B8 16A6 |
| =PP5V_S0_AUDIO_AMP | =PP5V_S0_AUDIO_AMP - @lio_lib.LIO | 4B6 12B8 12D8 |
| | =PP5V_S0_AUDIO_AMP_XW - @lio_lib.LIO | 4B8 16A6 |
| | PP5V_S0_AUDIO_AMP - @lio_lib.LIO | 4B6 |
| | =PP5V_S0_AUDIO_AMP_XW - @lio_lib.LIO | 4B8 16A6 |
| =PP5V_S3_LIO | =PP5V_S3_LIO - @lio_lib.LIO | 4B6 16A8 |
| | =PP5V_S3_REG - @lio_lib.LIO | 4C8 16B7 16C1 |
| | =PP5V_S3_LTUSB - @lio_lib.LIO | 4C6 8C7 |
| | PP5V_S3_LIO - @lio_lib.LIO | 4C6 |
| | =PP5V_S3_REG - @lio_lib.LIO | 4C8 16B7 16C1 |
| | =PP5V_S3_LTUSB - @lio_lib.LIO | 4C6 8C7 |
| =PP18V5_G3H_CHGR | =PP18V5_G3H_CHGR - @lio_lib.LIO | 4D6 17B7 17D8 |
| | =PP18V5_G3H_INRUSH - @lio_lib.LIO | 4D8 15B3 |
| | PP18V5_G3H_CHGR - @lio_lib.LIO | 4D6 |
| | =PP18V5_G3H_INRUSH - @lio_lib.LIO | 4D8 15B3 |
| =PPBUS_G3H_LIO_CONN | =PPBUS_G3H_LIO_CONN - @lio_lib.LIO | 4D6 15A3 |
| | =PPBUS_S0_LCDBKLT - @lio_lib.LIO | 4D6 19D7 |
| | =PPVBAT_G3H_CHGR_REG - @lio_lib.LIO | 4D8 17C1 17C4 |
| | =PPVIN_5V3V3 - @lio_lib.LIO | 4D6 16D8 |
| | PPVBAT_G3H_CHGR_REG - @lio_lib.LIO | 4D6 |
| | =PPVIN_5V3V3 - @lio_lib.LIO | 4D6 16D8 |
| | =PPVBAT_G3H_CHGR_REG - @lio_lib.LIO | 4D8 17C1 17C4 |
| | =PPBUS_S0_LCDBKLT - @lio_lib.LIO | 4D6 19D7 |
| =PPDCIN_G3H | =PPDCIN_G3H - @lio_lib.LIO | 4D6 7C6 |
| | =PPVBATT_G3H_LIO_CONN - @lio_lib.LIO | 4D8 17B1 |
| | =PPDCIN_G3H_LIO_CONN - @lio_lib.LIO | 4D8 15D3 |
| | PPDCIN_G3H - @lio_lib.LIO | 4D6 |
| | =PPVBATT_G3H_LIO_CONN - @lio_lib.LIO | 4D8 17B1 |
| | =PPDCIN_G3H_LIO_CONN - @lio_lib.LIO | 4D8 15D3 |
| =S3_REG_EN | =S3_REG_EN - @lio_lib.LIO | 4D1 16C7 16C8 |
| | LIO_S3_EN - @lio_lib.LIO | 4D3 7B6 |
| =SMBUS_EXCARD_SCL | =SMBUS_EXCARD_SCL - @lio_lib.LIO | 4A3 6C3 |
| | SMBUS_SB_SCL - @lio_lib.LIO | 4A6 7C3 |
| =SMBUS_EXCARD_SDA | =SMBUS_EXCARD_SDA - @lio_lib.LIO | 4A3 6C3 |
| | SMBUS_SB_SDA - @lio_lib.LIO | 4A6 7C3 |
| =SMBUS_MINI_SCL | =SMBUS_MINI_SCL - @lio_lib.LIO | 4A3 5B3 |
| | SMBUS_SMC_SCL - @lio_lib.LIO | 4A6 7C3 |
| | =SMBUS_TMPSNSR_SCL - @lio_lib.LIO | 4A3 9B5 |
| | SMBUS_SMC_SCL - @lio_lib.LIO | 4A6 7C3 |
| | =SMBUS_TMPSNSR_SCL - @lio_lib.LIO | 4A3 9B5 |
| =SMBUS_MINI_SDA | =SMBUS_MINI_SDA - @lio_lib.LIO | 4A3 5B3 |
| | SMBUS_SMC_SDA - @lio_lib.LIO | 4A6 7C3 |
| | =SMBUS_TMPSNSR_SDA - @lio_lib.LIO | 4A3 9B5 |
| | SMBUS_SMC_SDA - @lio_lib.LIO | 4A6 7C3 |
| | =SMBUS_TMPSNSR_SDA - @lio_lib.LIO | 4A3 9B5 |
| ACIN_DIV | ACIN_DIV - @lio_lib.LIO | 15A7 |
| ACIN_ENABLE_DIV2_L | ACIN_ENABLE_DIV2_L - @lio_lib.LIO | 15B5 |
| ACIN_ENABLE_DIV_L | ACIN_ENABLE_DIV_L - @lio_lib.LIO | 15B5 |
| ACOK_AND_PS_ON | ACOK_AND_PS_ON - @lio_lib.LIO | 15A5 |
| ACOK_DELAY | ACOK_DELAY - @lio_lib.LIO | 15A7 |
| ADAPTER_SENSE | ADAPTER_SENSE - @lio_lib.LIO | 15D6 |
| ADAPTER_SENSE_UF | ADAPTER_SENSE_UF - @lio_lib.LIO | 15D7 |
| AUDIO_SHIELD_PLANE | AUDIO_SHIELD_PLANE - @lio_lib.LIO | 13B3 |
| AUD_4V5_REG_IN | AUD_4V5_REG_IN - @lio_lib.LIO | 10A6 |
| AUD_BI_PORT_A_L | AUD_BI_PORT_A_L - @lio_lib.LIO | 10C2 11B7 |
| AUD_BI_PORT_A_R | AUD_BI_PORT_A_R - @lio_lib.LIO | 10C2 11A7 |
| AUD_BI_PORT_B_L | AUD_BI_PORT_B_L - @lio_lib.LIO | 10C2 14C3 |
| | AUD_BI_PORT_B_R - @lio_lib.LIO | 10C2 14C3 |
| AUD_BI_PORT_C_L | AUD_BI_PORT_C_L - @lio_lib.LIO | 10C7 14D4 |
| AUD_BI_PORT_C_R | AUD_BI_PORT_C_R - @lio_lib.LIO | 10C7 14D4 |
| AUD_BI_PORT_D_L | AUD_BI_PORT_D_L - @lio_lib.LIO | 10C7 12C8 |
| AUD_BI_PORT_D_R | AUD_BI_PORT_D_R - @lio_lib.LIO | 10C7 12A8 |
| AUD_BI_PORT_F_L | AUD_BI_PORT_F_L - @lio_lib.LIO | 10C2 14B5 |
| | AUD_BI_PORT_F_R - @lio_lib.LIO | 10C2 14B5 |
| AUD_CODEC_JDREF | AUD_CODEC_JDREF - @lio_lib.LIO | 10B4 |
| AUD_CODEC_OUTL_C | AUD_CODEC_OUTL_C - @lio_lib.LIO | 11B6 |
| AUD_CODEC_OUTL_R | AUD_CODEC_OUTL_R - @lio_lib.LIO | 11B5 |
| AUD_CODEC_OUTR_C | AUD_CODEC_OUTR_C - @lio_lib.LIO | 11A6 |
| AUD_CODEC_OUTR_R | AUD_CODEC_OUTR_R - @lio_lib.LIO | 11A5 |
| AUD_CODEC_VREF | AUD_CODEC_VREF - @lio_lib.LIO | 10B3 |
| AUD_CONNJ1_RING | AUD_CONNJ1_RING - @lio_lib.LIO | 13C7 |
| AUD_CONNJ1_SLEEVE | AUD_CONNJ1_SLEEVE - @lio_lib.LIO | 13C7 |
| AUD_CONNJ1_SLEEVE2 | AUD_CONNJ1_SLEEVE2 - @lio_lib.LIO | 13C7 13D5 |
| AUD_CONNJ1_SLEEVEDET | AUD_CONNJ1_SLEEVEDET - @lio_lib.LIO | 13C7 |
| AUD_CONNJ1_TIP | AUD_CONNJ1_TIP - @lio_lib.LIO | 13C7 |
| AUD_CONNJ1_TIPDET | AUD_CONNJ1_TIPDET - @lio_lib.LIO | 13C7 |
| AUD_CONNJ2_RING | AUD_CONNJ2_RING - @lio_lib.LIO | 13B7 |
| AUD_CONNJ2_SLEEVE | AUD_CONNJ2_SLEEVE - @lio_lib.LIO | 13B7 |
| AUD_CONNJ2_SLEEVEDET | AUD_CONNJ2_SLEEVEDET - @lio_lib.LIO | 13A7 |
| AUD_CONNJ2_TIP | AUD_CONNJ2_TIP - @lio_lib.LIO | 13A7 |
| AUD_CONNJ2_TIPDET | AUD_CONNJ2_TIPDET - @lio_lib.LIO | 13A7 |
| AUD_GPIO_0 | AUD_GPIO_0 - @lio_lib.LIO | 10C7 12C8 |
| AUD_GPIO_0 R | AUD_GPIO_0 R - @lio_lib.LIO | 10C5 |
| AUD_GPIO_1 | AUD_GPIO_1 - @lio_lib.LIO | 10C7 |
| AUD_HPAMP_INL_M | AUD_HPAMP_INL_M - @lio_lib.LIO | 11B3 11C7 |
| AUD_HPAMP_INR_M | AUD_HPAMP_INR_M - @lio_lib.LIO | 11A3 11C7 |
| AUD_HPAMP_MUTE_L | AUD_HPAMP_MUTE_L - @lio_lib.LIO | 11C6 |
| AUD_HPAMP_OUTL_R | AUD_HPAMP_OUTL_R - @lio_lib.LIO | 11B3 11D2 |
| AUD_HPAMP_OUTR_R | AUD_HPAMP_OUTR_R - @lio_lib.LIO | 11A3 11C2 |
| AUD_INJACK_INSERT_L | AUD_INJACK_INSERT_L - @lio_lib.LIO | 14B6 |
| AUD_J1_DET_RC | AUD_J1_DET_RC - @lio_lib.LIO | 14C7 |
| AUD_J1_SLEEVEDET_INV | AUD_J1_SLEEVEDET_INV - @lio_lib.LIO | 14C7 |
| AUD_J1_SLEEVEDET_R | AUD_J1_SLEEVEDET_R - @lio_lib.LIO | 13C3 14B6 14B8 |
| AUD_J1_TIPDET_R | AUD_J1_TIPDET_R - @lio_lib.LIO | 13C3 14C8 |
| AUD_J2_COM | AUD_J2_COM - @lio_lib.LIO | 13A4 |
| AUD_J2_DET_RC | AUD_J2_DET_RC - @lio_lib.LIO | 14B7 |
| AUD_J2_OPT_OUT | AUD_J2_OPT_OUT - @lio_lib.LIO | 13B7 |
| AUD_J2_TIPDET_R | AUD_J2_TIPDET_R - @lio_lib.LIO | 13A3 14B8 |
| AUD_LO_GND | AUD_LO_GND - @lio_lib.LIO | 11C2 13C3 |
| AUD_OUTJACK_INSERT_L | AUD_OUTJACK_INSERT_L - @lio_lib.LIO | 14C6 |
| AUD_PORTA_DET_L | AUD_PORTA_DET_L - @lio_lib.LIO | 14C5 |
| AUD_PORTA_L | AUD_PORTA_L - @lio_lib.LIO | 11C2 13C3 |
| AUD_PORTA_R | AUD_PORTA_R - @lio_lib.LIO | 11C2 13C3 |
| AUD_PORTC_L | AUD_PORTC_L - @lio_lib.LIO | 13A3 14D2 |
| AUD_PORTC_R | AUD_PORTC_R - @lio_lib.LIO | 13B3 14D2 |
| AUD_PORTE_DET_L | AUD_PORTE_DET_L - @lio_lib.LIO | 14C5 |
| AUD_REG_SHDN_L | AUD_REG_SHDN_L - @lio_lib.LIO | 10A6 |
| AUD_SENSE_A | AUD_SENSE_A - @lio_lib.LIO | 10C2 14B8 14C8 |
| AUD_SENSE_B | AUD_SENSE_B - @lio_lib.LIO | 10C2 14C8 |
| AUD_SPDIF_IN | AUD_SPDIF_IN - @lio_lib.LIO | 10C2 13B3 |
| AUD_SPDIF_O | AUD_SPDIF_O - @lio_lib.LIO | 10D3 |
| AUD_SPDIF_OUT | AUD_SPDIF_OUT - @lio_lib.LIO | 10D2 13D3 |
| AUD_SPKRAMP_INL_L | AUD_SPKRAMP_INL_L - @lio_lib.LIO | 12C7 |
| AUD_SPKRAMP_INR_L | AUD_SPKRAMP_INR_L - @lio_lib.LIO | 12A7 |
| AUD_SPKRAMP_SHUTDOWN_L | AUD_SPKRAMP_SHUTDOWN_L - @lio_lib.LIO | 12A8 12C7 |
| AUD_VREF_PORT_A | AUD_VREF_PORT_A - @lio_lib.LIO | 10C2 11C7 |
| AUD_VREF_PORT_B | AUD_VREF_PORT_B - @lio_lib.LIO | 10C2 14C3 |
| AUD_VREF_PORT_F | AUD_VREF_PORT_F - @lio_lib.LIO | 10C2 14B5 |
| AVDD_ADC_DAC | AVDD_ADC_DAC - @lio_lib.LIO | 10D4 |
| BEEP | BEEP - @lio_lib.LIO | 10C5 |
| BI_MIC_BIAS | BI_MIC_BIAS - @lio_lib.LIO | 14C3 |
| BI_MIC_HI | BI_MIC_HI - @lio_lib.LIO | 13C2 14C1 |
| BI_MIC_LO | BI_MIC_LO - @lio_lib.LIO | 13C2 14C1 |
| BI_MIC_SHIELD | BI_MIC_SHIELD - @lio_lib.LIO | 13C2 14B1 |
| BKLT_GND | BKLT_GND - @lio_lib.LIO | 18C5 19C3 |
| BKLT_P5V_EN | BKLT_P5V_EN - @lio_lib.LIO | 18C5 19C3 |
| BKLT_PWM | BKLT_PWM - @lio_lib.LIO | 18C5 19C3 |
| BKLT_PWR | BKLT_PWR - @lio_lib.LIO | 18C5 19C3 |
| CHGR_ACLIM | CHGR_ACLIM - @lio_lib.LIO | 17A6 17D6 |
| CHGR_ACLIM_R | CHGR_ACLIM_R - @lio_lib.LIO | 17A7 |
| CHGR_ACPRN | CHGR_ACPRN - @lio_lib.LIO | 17A5 17C6 17C8 |
| CHGR_ACSET | CHGR_ACSET - @lio_lib.LIO | 17C6 17D7 |
| CHGR_ACSET_D | CHGR_ACSET_D - @lio_lib.LIO | 17C7 |
| CHGR_BOOT | CHGR_BOOT - @lio_lib.LIO | 17C4 |
| CHGR_BOOT_R | CHGR_BOOT_R - @lio_lib.LIO | 17C3 |
| CHGR_CHLIM | CHGR_CHLIM - @lio_lib.LIO | 17A6 17C6 |
| CHGR_CHLIM_R | CHGR_CHLIM_R - @lio_lib.LIO | 17A7 |
| CHGR_CSI_N | CHGR_CSI_N - @lio_lib.LIO | 17D4 |
| CHGR_CSI_P | CHGR_CSI_P - @lio_lib.LIO | 9D4 17D4 |
| CHGR_CSI_RN | CHGR_CSI_RN - @lio_lib.LIO | 9D4 17D3 |
| CHGR_CSO_N | CHGR_CSO_N - @lio_lib.LIO | 17C1 17C6 |
| CHGR_CSO_P | CHGR_CSO_P - @lio_lib.LIO | 17B1 17C6 |
| CHGR_CSO_R_N | CHGR_CSO_R_N - @lio_lib.LIO | 9D7 17C2 17D6 |
| CHGR_CSO_R_P | CHGR_CSO_R_P - @lio_lib.LIO | 9D7 17B2 |
| CHGR_DCIN | CHGR_DCIN - @lio_lib.LIO | 17D4 17D7 |
| CHGR_EN | CHGR_EN - @lio_lib.LIO | 17C4 17C7 |
| CHGR_ICM | CHGR_ICM - @lio_lib.LIO | 17D5 |
| CHGR_ICM_R | CHGR_ICM_R - @lio_lib.LIO | 17D6 |
| CHGR_ICOMP | CHGR_ICOMP - @lio_lib.LIO | 17D6 |
| CHGR_LGATE | CHGR_LGATE - @lio_lib.LIO | 17C4 |
| CHGR_PHASE | CHGR_PHASE - @lio_lib.LIO | 17C4 |
| CHGR_PHASE_R | CHGR_PHASE_R - @lio_lib.LIO | 17C4 |
| CHGR_SGATE | CHGR_SGATE - @lio_lib.LIO | 17D4 |
| CHGR_SGND | CHGR_SGND - @lio_lib.LIO | 17A7 17A7 17B8 17C6 17C7 17C8 17D5 |
| CHGR_UGATE | CHGR_UGATE - @lio_lib.LIO | 17C4 |
| CHGR_VCOMP | CHGR_VCOMP - @lio_lib.LIO | 17D6 |
| CHGR_VCOMP_C | CHGR_VCOMP_C - @lio_lib.LIO | 17D6 |
| CHGR_VDD | CHGR_VDD - @lio_lib.LIO | 17C8 17D5 17D7 |
| CHGR_VDDP | CHGR_VDDP - @lio_lib.LIO | 17C2 17D5 |
| CHGR_VREF | CHGR_VREF - @lio_lib.LIO | 17B8 17C6 |
| CHGR_VREF_VF | CHGR_VREF_VF - @lio_lib.LIO | 17A7 17B7 17B7 |
| CHG_EN_DIV2_L | CHG_EN_DIV2_L - @lio_lib.LIO | 17A5 |
| CHG_EN_DIV_L | CHG_EN_DIV_L - @lio_lib.LIO | 17A4 |
| CODEC_DVDD | CODEC_DVDD - @lio_lib.LIO | 10D5 |
| CODEC_SDATA_IN | CODEC_SDATA_IN - @lio_lib.LIO | 10C5 |
| EXCARD_CLKREQ_CONN | EXCARD_CLKREQ_CONN - @lio_lib.LIO | 6B3 |
| EXCARD_CLKREQ_CONN_L | EXCARD_CLKREQ_CONN_L - @lio_lib.LIO | 6A4 6C3 |
| EXCARD_CLKREQ_L | EXCARD_CLKREQ_L - @lio_lib.LIO | 4C6 6B2 7C6 |
| EXCARD_CPPE_L | EXCARD_CPPE_L - @lio_lib.LIO | 6A8 6C3 6C3 |
| EXCARD_CPUSB_L | EXCARD_CPUSB_L - @lio_lib.LIO | 6A8 6C3 6C3 |
| EXCARD_OC_L | EXCARD_OC_L - @lio_lib.LIO | 4C6 6C7 7C6 |
| EXCARD_RCLKEN | EXCARD_RCLKEN - @lio_lib.LIO | 6B3 6C5 |
| EXCARD_SHDN_L_R | EXCARD_SHDN_L_R - @lio_lib.LIO | 6C6 |
| GND_5VS3_3VS3_SGND | GND_5VS3_3VS3_SGND - @lio_lib.LIO | 16A6 |
| GND_ADAPTER_UF | GND_ADAPTER_UF - @lio_lib.LIO | 15D7 |
| GND_AUDIO_HPAMP_PGND | GND_AUDIO_HPAMP_PGND - @lio_lib.LIO | 11C6 |
| HDA_BITCLK | HDA_BITCLK - @lio_lib.LIO | 7B6 10D7 |
| HDA_RST_L | HDA_RST_L - @lio_lib.LIO | 7B3 10C7 |
| HDA_SDIN0 | HDA_SDIN0 - @lio_lib.LIO | 7B6 10C7 |
| HDA_SDOUT | HDA_SDOUT - @lio_lib.LIO | 7B6 10D7 |
| HDA_SYNC | HDA_SYNC - @lio_lib.LIO | 7B6 10D7 |
| HS_MIC_BIAS | HS_MIC_BIAS - @lio_lib.LIO | 14B4 |
| HS_MIC_HI | HS_MIC_HI - @lio_lib.LIO | 13D3 14B3 |
| HS_MIC_LO | HS_MIC_LO - @lio_lib.LIO | 13D3 14B3 |
| HS_MIC_SUPBIAS | HS_MIC_SUPBIAS - @lio_lib.LIO | 14A4 |
| HS_MIC_SW_RC | HS_MIC_SW_RC - @lio_lib.LIO | 14A4 |
| IPHS_SW_INT_TO_SB | IPHS_SW_INT_TO_SB - @lio_lib.LIO | 7B3 14A3 |
| IPHS_SW_SUPBIAS_EN_L | IPHS_SW_SUPBIAS_EN_L - @lio_lib.LIO | 7B6 14A5 |
| LCDBKLT_PWM | LCDBKLT_PWM - @lio_lib.LIO | 19C4 |
| LCDBKLT_PWM_RSTGATED | LCDBKLT_PWM_RSTGATED - @lio_lib.LIO | 19A6 |
| LCDBKLT_PWREN_L | LCDBKLT_PWREN_L - @lio_lib.LIO | 19C6 |
| LCDBKLT_PWREN_SW_L | LCDBKLT_PWREN_SW_L - @lio_lib.LIO | 19B6 |
| LDO_FDBK | LDO_FDBK - @lio_lib.LIO | 17B5 |
| LDO_OUT | LDO_OUT - @lio_lib.LIO | 17B5 |
| LEFT_USB_EMI_N | LEFT_USB_EMI_N - @lio_lib.LIO | 8C4 |
| LEFT_USB_EMI_P | LEFT_USB_EMI_P - @lio_lib.LIO | 8C4 |
| LEFT_USB_N | LEFT_USB_N - @lio_lib.LIO | 4A3 8C4 |
| | USB2_LT_N - @lio_lib.LIO | 4A6 7C3 |
| LEFT_USB_OC_L | LEFT_USB_OC_L - @lio_lib.LIO | 4A3 8C7 |
| | LTUSB_OC_L - @lio_lib.LIO | 4A6 7C6 |
| LEFT_USB_P | LEFT_USB_P - @lio_lib.LIO | 4B3 8C4 |
| | USB2_LT_P - @lio_lib.LIO | 4B6 7C3 |
| LIO_BATT_ISENSE | LIO_BATT_ISENSE - @lio_lib.LIO | 7C6 9C6 |
| LIO_DCIN_ISENSE | LIO_DCIN_ISENSE - @lio_lib.LIO | 7B6 9C2 |
| LIO_P3V3S0_EN_R_L | LIO_P3V3S0_EN_R_L - @lio_lib.LIO | 16A3 |
| LIO_P5VS0_EN_R_L | LIO_P5VS0_EN_R_L - @lio_lib.LIO | 16A8 |
| LIO_PP3V3_S3_EN | LIO_PP3V3_S3_EN - @lio_lib.LIO | 16C7 16C7 |
| LIO_PP5V_S3_EN | LIO_PP5V_S3_EN - @lio_lib.LIO | 16C7 16C7 |
| MAX9705L_NIN | MAX9705L_NIN - @lio_lib.LIO | 12C6 |
| MAX9705L_PIN | MAX9705L_PIN - @lio_lib.LIO | 12C6 |
| MAX9705R_NIN | MAX9705R_NIN - @lio_lib.LIO | 12A6 |
| MAX9705R_PIN | MAX9705R_PIN - @lio_lib.LIO | 12A6 |
| MAX9724_C1N | MAX9724_C1N - @lio_lib.LIO | 11C4 |
| MAX9724_C1P | MAX9724_C1P - @lio_lib.LIO | 11C4 |
| MAX9724_PVSS | MAX9724_PVSS - @lio_lib.LIO | 11C4 |
| MINI_CLKREQ_L | MINI_CLKREQ_L - @lio_lib.LIO | 4B6 5C6 7C6 |
| NC_AUD_BI_PORT_E_L | NC_AUD_BI_PORT_E_L - @lio_lib.LIO | 10C3 |
| NC_AUD_BI_PORT_E_R | NC_AUD_BI_PORT_E_R - @lio_lib.LIO | 10C3 |
| NC_AUD_BI_PORT_G_L | NC_AUD_BI_PORT_G_L - @lio_lib.LIO | 10C3 |
| NC_AUD_BI_PORT_G_R | NC_AUD_BI_PORT_G_R - @lio_lib.LIO | 10C3 |
| NC_AUD_BI_PORT_H_L | NC_AUD_BI_PORT_H_L - @lio_lib.LIO | 10C3 |
| NC_AUD_BI_PORT_H_R | NC_AUD_BI_PORT_H_R - @lio_lib.LIO | 10C3 |
| NC_AUD_VREF_PORT_B2 | NC_AUD_VREF_PORT_B2 - @lio_lib.LIO | 10C3 |
| NC_AUD_VREF_PORT_C | NC_AUD_VREF_PORT_C - @lio_lib.LIO | 10C3 |
| NC_AUD_VREF_PORT_E | NC_AUD_VREF_PORT_E - @lio_lib.LIO | 10C3 |
| NC_BAL_IN_COM | NC_BAL_IN_COM - @lio_lib.LIO | 10C5 |
| NC_BAL_IN_L | NC_BAL_IN_L - @lio_lib.LIO | 10C5 |
| NC_BAL_IN_R | NC_BAL_IN_R - @lio_lib.LIO | 10C5 |
| NC_CHGR_BGATE | NC_CHGR_BGATE - @lio_lib.LIO | 17D4 |
| NC_LED_WLAN_L | NC_LED_WLAN_L - @lio_lib.LIO | 5B3 |
| NC_LED_WPAN_L | NC_LED_WPAN_L - @lio_lib.LIO | 5B3 |
| NC_LED_WWAN_L | NC_LED_WWAN_L - @lio_lib.LIO | 5B3 |
| NC_LIO_P3V3S3_PGOOD | NC_LIO_P3V3S3_PGOOD - @lio_lib.LIO | 16B5 |
| NC_LIO_P5VS3_PGOOD | NC_LIO_P5VS3_PGOOD - @lio_lib.LIO | 16B5 |
| NC_UIM_CLK | NC_UIM_CLK - @lio_lib.LIO | 5C3 |
| NC_UIM_DATA | NC_UIM_DATA - @lio_lib.LIO | 5C3 |
| NC_UIM_PWR | NC_UIM_PWR - @lio_lib.LIO | 5C3 |
| NC_UIM_RESET | NC_UIM_RESET - @lio_lib.LIO | 5C3 |
| NC_UIM_VPP | NC_UIM_VPP - @lio_lib.LIO | 5C3 |
| NC_VRP | NC_VRP - @lio_lib.LIO | 10B3 |
| NC_W_DISABLE_L | NC_W_DISABLE_L - @lio_lib.LIO | 5C3 |
| ONEWIRE_DCIN_DIV | ONEWIRE_DCIN_DIV - @lio_lib.LIO | 15C5 |
| ONEWIRE_EN | ONEWIRE_EN - @lio_lib.LIO | 15C3 |
| ONEWIRE_ESD | ONEWIRE_ESD - @lio_lib.LIO | 15C4 |
| ONEWIRE_OVERVOLT | ONEWIRE_OVERVOLT - @lio_lib.LIO | 15C4 |
| ONEWIRE_PWR_EN_L | ONEWIRE_PWR_EN_L - @lio_lib.LIO | 15C2 |
| ONEWIRE_PWR_EN_L_DIV | ONEWIRE_PWR_EN_L_DIV - @lio_lib.LIO | 15C2 |
| P3V3S3_BOOT | P3V3S3_BOOT - @lio_lib.LIO | 16B3 16B6 |
| P3V3S3_LG | P3V3S3_LG - @lio_lib.LIO | 16B3 |
| P3V3S3_PHASE | P3V3S3_PHASE - @lio_lib.LIO | 16C3 |
| P3V3S3_UG | P3V3S3_UG - @lio_lib.LIO | 16B3 |
| P3V3WLAN_SS | P3V3WLAN_SS - @lio_lib.LIO | 5C2 |
| P3VS3_VO2 | P3VS3_VO2 - @lio_lib.LIO | 16B6 |
| P5VS3_BOOT | P5VS3_BOOT - @lio_lib.LIO | 16C3 16C6 |
| P5VS3_CS1 | P5VS3_CS1 - @lio_lib.LIO | 16C6 |
| P5VS3_CS2 | P5VS3_CS2 - @lio_lib.LIO | 16C6 |
| P5VS3_LG | P5VS3_LG - @lio_lib.LIO | 16C3 |
| P5VS3_PHASE | P5VS3_PHASE - @lio_lib.LIO | 16C3 |
| P5VS3_UG | P5VS3_UG - @lio_lib.LIO | 16C3 |
| P5VS3_V5FILT | P5VS3_V5FILT - @lio_lib.LIO | 16B6 16C5 16C6 |
| P5VS3_VO1 | P5VS3_VO1 - @lio_lib.LIO | 16B6 |
| P5VS3_VREF | P5VS3_VREF - @lio_lib.LIO | 16C5 16C7 |
| P5VS3_VREG3 | P5VS3_VREG3 - @lio_lib.LIO | 16C5 |
| P5VS3_VREG5 | P5VS3_VREG5 - @lio_lib.LIO | 16C5 |
| PBUS_LDO_EN | PBUS_LDO_EN - @lio_lib.LIO | 7B3 17B7 |
| PCIE_CLK100M_EXCARD_N | PCIE_CLK100M_EXCARD_N - @lio_lib.LIO | 4D6 6C3 7B2 |
| PCIE_CLK100M_EXCARD_P | PCIE_CLK100M_EXCARD_P - @lio_lib.LIO | 4D6 6C3 7B2 |
| PCIE_CLK100M_EXCARD_UF_N | PCIE_CLK100M_EXCARD_UF_N - @lio_lib.LIO | 4D6 7B4 |
| PCIE_CLK100M_EXCARD_UF_P | PCIE_CLK100M_EXCARD_UF_P - @lio_lib.LIO | 4D6 7B4 |
| PCIE_CLK100M_MINI_N | PCIE_CLK100M_MINI_N - @lio_lib.LIO | 4B6 5C6 7C2 |
| PCIE_CLK100M_MINI_P | PCIE_CLK100M_MINI_P - @lio_lib.LIO | 4B6 5C6 7C2 |
| PCIE_CLK100M_MINI_UF_N | PCIE_CLK100M_MINI_UF_N - @lio_lib.LIO | 4B6 7C4 |
| PCIE_CLK100M_MINI_UF_P | PCIE_CLK100M_MINI_UF_P - @lio_lib.LIO | 4B6 7C4 |
| PCIE_EXCARD_D2R_N | PCIE_EXCARD_D2R_N - @lio_lib.LIO | 4D6 6C3 7B3 |
| PCIE_EXCARD_D2R_P | PCIE_EXCARD_D2R_P - @lio_lib.LIO | 4D6 6C3 7B3 |
| PCIE_EXCARD_R2D_N | PCIE_EXCARD_R2D_N - @lio_lib.LIO | 4C6 6C3 7B3 |
| PCIE_EXCARD_R2D_P | PCIE_EXCARD_R2D_P - @lio_lib.LIO | 4D6 6C3 7B3 |
| PCIE_MINI_D2R_N | PCIE_MINI_D2R_N - @lio_lib.LIO | 4B6 5C6 7C3 |
| PCIE_MINI_D2R_P | PCIE_MINI_D2R_P - @lio_lib.LIO | 4B6 5C6 7C3 |
| PCIE_MINI_R2D_N | PCIE_MINI_R2D_N - @lio_lib.LIO | 4C6 5B6 7C3 |
| PCIE_MINI_R2D_P | PCIE_MINI_R2D_P - @lio_lib.LIO | 4C6 5B6 7B3 |
| PCIE_WAKE_EXCARD_L | PCIE_WAKE_EXCARD_L - @lio_lib.LIO | 4C3 6C3 |
| | PCIE_WAKE_L - @lio_lib.LIO | 4C6 7C3 |
| | PCIE_WAKE_MINI_L - @lio_lib.LIO | 4C3 5C6 |
| | PCIE_WAKE_L - @lio_lib.LIO | 4C6 7C3 |
| PGND1 | PGND1 - @lio_lib.LIO | 16B6 |
| PGND2 | PGND2 - @lio_lib.LIO | 16B6 |
| PLT_RESET_SWITCH_L | PLT_RESET_SWITCH_L - @lio_lib.LIO | 6C3 6C3 |
| PM_WLAN_EN_L | PM_WLAN_EN_L - @lio_lib.LIO | 5C1 7B3 |
| PP1V5_S0_EXCARD_SWITCH | PP1V5_S0_EXCARD_SWITCH - @lio_lib.LIO | 6C3 6C3 |
| PP3V3_S0_AUDIO_F | PP3V3_S0_AUDIO_F - @lio_lib.LIO | 14A5 14A6 14B8 14C8 14C8 |
| PP3V3_S0_EXCARD_SWITCH | PP3V3_S0_EXCARD_SWITCH - @lio_lib.LIO | 6C3 6C3 |
| PP3V3_S3_EXCARD_SWITCH | PP3V3_S3_EXCARD_SWITCH - @lio_lib.LIO | 6C3 6C3 |
| PP3V3_WLAN | PP3V3_WLAN - @lio_lib.LIO | 5D4 |
| PP4V5_AUDIO_ANALOG | PP4V5_AUDIO_ANALOG - @lio_lib.LIO | 10A3 10D2 |
| PP5V_AUDIO_HPAMP_PVDD_F | PP5V_AUDIO_HPAMP_PVDD_F - @lio_lib.LIO | 11D6 |
| PP5V_PWRON_USB_EMI | PP5V_PWRON_USB_EMI - @lio_lib.LIO | 8C3 |
| PP5V_S0_AUDIO_F | PP5V_S0_AUDIO_F - @lio_lib.LIO | 12B8 12C6 |
| PP5V_S3_USB_SWITCH | PP5V_S3_USB_SWITCH - @lio_lib.LIO | 8C5 |
| PP5V_SW_LCDBKLT | PP5V_SW_LCDBKLT - @lio_lib.LIO | 19C5 |
| PP18V5_DCIN | PP18V5_DCIN - @lio_lib.LIO | 15B8 15D1 |
| PP18V5_DCIN_FUSE | PP18V5_DCIN_FUSE - @lio_lib.LIO | 15D6 |
| PP18V5_DCIN_ONEWIRE | PP18V5_DCIN_ONEWIRE - @lio_lib.LIO | 15D5 |
| PP18V5_DCIN_UF | PP18V5_DCIN_UF - @lio_lib.LIO | 15D7 |
| PPBUS_S0_LCDBKLT_EN_DIV | PPBUS_S0_LCDBKLT_EN_DIV - @lio_lib.LIO | 19D5 |
| PPBUS_S0_LCDBKLT_EN_L | PPBUS_S0_LCDBKLT_EN_L - @lio_lib.LIO | 19C6 |
| PPBUS_S0_LCDBKLT_FUSED | PPBUS_S0_LCDBKLT_FUSED - @lio_lib.LIO | 19D6 |
| PPBUS_S0_LCDBKLT_SW | PPBUS_S0_LCDBKLT_SW - @lio_lib.LIO | 19C5 |
| PPDCIN_G3H_LIO_CONN_R | PPDCIN_G3H_LIO_CONN_R - @lio_lib.LIO | 15D4 |
| PPVBATT_G3H_DIO | PPVBATT_G3H_DIO - @lio_lib.LIO | 17B3 |
| PPVBATT_G3H_FET | PPVBATT_G3H_FET - @lio_lib.LIO | 17B3 |
| PPVBATT_G3H_FET_F | PPVBATT_G3H_FET_F - @lio_lib.LIO | 17B2 |
| PPVBATT_G3H_FET_GATE | PPVBATT_G3H_FET_GATE - @lio_lib.LIO | 17A2 |
| PPVBATT_G3H_PRE | PPVBATT_G3H_PRE - @lio_lib.LIO | 17B4 |
| PPVBAT_G3H_CHGR_OUT | PPVBAT_G3H_CHGR_OUT - @lio_lib.LIO | 17B6 17C1 |
| PPVDCIN_G3H_PRE | PPVDCIN_G3H_PRE - @lio_lib.LIO | 17D4 |
| PPVDCIN_G3H_R | PPVDCIN_G3H_R - @lio_lib.LIO | 17D2 |
| SMC_ADAPTER_EN | SMC_ADAPTER_EN - @lio_lib.LIO | 7C6 15B6 |
| SMC_BATT_CHG_EN | SMC_BATT_CHG_EN - @lio_lib.LIO | 7C6 17A5 |
| SMC_BATT_ISET | SMC_BATT_ISET - @lio_lib.LIO | 7C6 17A8 |
| SMC_BATT_ISET_L | SMC_BATT_ISET_L - @lio_lib.LIO | 17A8 |
| SMC_BATT_TRICKLE_EN_L | SMC_BATT_TRICKLE_EN_L - @lio_lib.LIO | 7B6 17A2 |
| SMC_BC_ACOK | SMC_BC_ACOK - @lio_lib.LIO | 7B6 15A6 15B2 17A5 |
| SMC_BC_ACOK_R | SMC_BC_ACOK_R - @lio_lib.LIO | 15A6 |
| SMC_EXCARD_CP | SMC_EXCARD_CP - @lio_lib.LIO | 6A6 7B6 |
| SMC_EXCARD_PWR_EN | SMC_EXCARD_PWR_EN - @lio_lib.LIO | 6C7 7B6 |
| SMC_SYS_ISET | SMC_SYS_ISET - @lio_lib.LIO | 7C6 17A8 |
| SMC_SYS_ISET_L | SMC_SYS_ISET_L - @lio_lib.LIO | 17A8 |
| SPKRAMP_L_N_OUT | SPKRAMP_L_N_OUT - @lio_lib.LIO | 12C3 12C3 |
| SPKRAMP_L_P_OUT | SPKRAMP_L_P_OUT - @lio_lib.LIO | 12C3 12C3 |
| SPKRAMP_R_N_OUT | SPKRAMP_R_N_OUT - @lio_lib.LIO | 12A3 12B3 |
| SPKRAMP_R_P_OUT | SPKRAMP_R_P_OUT - @lio_lib.LIO | 12A3 12B3 |
| SPKRAMP_SYNC1 | SPKRAMP_SYNC1 - @lio_lib.LIO | 12A4 12C3 |
| SPKRCONN_L_N_OUT | SPKRCONN_L_N_OUT - @lio_lib.LIO | 12C1 13C2 |
| SPKRCONN_L_P_OUT | SPKRCONN_L_P_OUT - @lio_lib.LIO | 12C1 13C2 |
| SPKRCONN_R_N_OUT | SPKRCONN_R_N_OUT - @lio_lib.LIO | 12B1 13C2 |
| SPKRCONN_R_P_OUT | SPKRCONN_R_P_OUT - @lio_lib.LIO | 12B1 13C2 |
| SPKR_SHIELD | SPKR_SHIELD - @lio_lib.LIO | 13C2 |
| SW_SUPBIAS_EN_R | SW_SUPBIAS_EN_R - @lio_lib.LIO | 14A4 |
| SYS_ONEWIRE | SYS_ONEWIRE - @lio_lib.LIO | 7C6 15C1 |
| SYS_ONEWIRE_BILAT | SYS_ONEWIRE_BILAT - @lio_lib.LIO | 15C2 |
| TCHG_EN_DIV2_L | TCHG_EN_DIV2_L - @lio_lib.LIO | 17A4 |
| TCHG_EN_DIV_L | TCHG_EN_DIV_L - @lio_lib.LIO | 17A4 |
| TONSEL | TONSEL - @lio_lib.LIO | 16C6 |
| TP_CHGR_DCPRN | TP_CHGR_DCPRN - @lio_lib.LIO | 17C4 |
| TP_CHGR_DCSET | TP_CHGR_DCSET - @lio_lib.LIO | 17C4 |
| TP_CHGR_VADJ | TP_CHGR_VADJ - @lio_lib.LIO | 17D6 |
| TP_EXCARD_STBY_L | TP_EXCARD_STBY_L - @lio_lib.LIO | 6C7 |
| USB2_EXCARD_N | USB2_EXCARD_N - @lio_lib.LIO | 4D6 6C3 7C3 |
| USB2_EXCARD_P | USB2_EXCARD_P - @lio_lib.LIO | 4D6 6C3 7C3 |
| USB2_MINI_EMI_N | USB2_MINI_EMI_N - @lio_lib.LIO | 5B4 |
| USB2_MINI_EMI_P | USB2_MINI_EMI_P - @lio_lib.LIO | 5B4 |
| USB2_MINI_N | USB2_MINI_N - @lio_lib.LIO | 4B6 5B2 7B3 |
| USB2_MINI_P | USB2_MINI_P - @lio_lib.LIO | 4B6 5B2 7B3 |

www.laptop-schematics.com

Title: Cref Part Report
Design: lio
Date: Oct 5 17:43:38 2007

| | | |
|---|---|---|
| C3400 | CAP_402 | lio[5C3] |
| C3401 | CAP_603 | lio[5C3] |
| C3410 | CAP_603 | lio[5C3] |
| C3411 | CAP_402 | lio[5C3] |
| C3420 | CAP_603 | lio[5C3] |
| C3421 | CAP_402 | lio[5C3] |
| C3422 | CAP_402 | lio[5C3] |
| C3450 | CAP_402 | lio[5C3] |
| C3451 | CAP_402 | lio[5C2] |
| C3500 | CAP_402 | lio[6C4] |
| C3501 | CAP_402 | lio[6C4] |
| C3502 | CAP_402 | lio[6C4] |
| C3503 | CAP_603 | lio[6C4] |
| C3504 | CAP_603 | lio[6C4] |
| C3505 | CAP_603 | lio[6C4] |
| C3530 | CAP_402 | lio[6C8] |
| C3531 | CAP_603 | lio[6C7] |
| C3534 | CAP_402 | lio[6C8] |
| C3535 | CAP_603 | lio[6C7] |
| C3550 | CAP_402 | lio[6A7] |
| C3560 | CAP_402 | lio[6A3] |
| C4600 | CAP_603 | lio[8B6] |
| C4601 | CAP_402 | lio[8B7] |
| C4602 | CAP_603 | lio[8B5] |
| C4603 | CAP_P_B2 | lio[8B5] |
| C4650 | CAP_402 | lio[8C4] |
| C5705 | CAP_402 | lio[9C3] |
| C5715 | CAP_402 | lio[9C7] |
| C5750 | CAP_402 | lio[9B4] |
| C6200 | CAP_402-LF | lio[10D5] |
| C6201 | CAP_402 | lio[10D5] |
| C6203 | CAP_402 | lio[10D5] |
| C6204 | CAP_P_B2 | lio[10D3] |
| C6205 | CAP_P_B2 | lio[10A3] |
| C6206 | CAP_402 | lio[10D3] |
| C6207 | CAP_402 | lio[10D3] |
| C6208 | CAP_603 | lio[10A5] |
| C6209 | CAP_402 | lio[10A5] |
| C6210 | CAP_402 | lio[10A6] |
| C6211 | CAP_402 | lio[10A4] |
| C6220 | CAP_402 | lio[10B5] |
| C6221 | CAP_P_SMA-HF | lio[10B3] |
| C6222 | CAP_402 | lio[10B3] |
| C6500 | CAP_0805 | lio[11D5] |
| C6501 | CAP_402 | lio[11D5] |
| C6502 | CAP_0805 | lio[11C4] |
| C6503 | CAP_402 | lio[11C5] |
| C6504 | CAP_402 | lio[11C4] |
| C6510 | CAP_P_SMA-HF | lio[11B6] |
| C6511 | CAP_402 | lio[11B4] |
| C6512 | CAP_603 | lio[11B5] |
| C6520 | CAP_P_SMA-HF | lio[11A6] |
| C6521 | CAP_402 | lio[11A4] |
| C6522 | CAP_603 | lio[11A5] |
| C6610 | CAP_402 | lio[12C5] |
| C6611 | CAP_402 | lio[12C4] |
| C6612 | CAP_P_CASE-B2 | lio[12C4] |
| C6613 | CAP_402 | lio[12C6] |
| C6614 | CAP_402 | lio[12C6] |
| C6620 | CAP_402 | lio[12B5] |
| C6621 | CAP_402 | lio[12B5] |
| C6622 | CAP_P_CASE-B2 | lio[12B5] |
| C6623 | CAP_402 | lio[12A6] |
| C6624 | CAP_402 | lio[12A6] |
| C6700 | CAP_402 | lio[13C7] |
| C6705 | CAP_402 | lio[13C5] |
| C6750 | CAP_402 | lio[13A7] |
| C6751 | CAP_603 | lio[13A7] |
| C6756 | CAP_402 | lio[13A5] |
| C6800 | CAP_402 | lio[14A7] |
| C6801 | CAP_402 | lio[14C7] |
| C6802 | CAP_402 | lio[14B7] |
| C6811 | CAP_402 | lio[14A7] |
| C6832 | CAP_0805 | lio[14D2] |
| C6833 | CAP_0805 | lio[14D2] |
| C6840 | CAP_402 | lio[14B4] |
| C6841 | CAP_402 | lio[14B4] |
| C6842 | CAP_402 | lio[14B4] |
| C6843 | CAP_603 | lio[14B4] |
| C6844 | CAP_402 | lio[14A4] |
| C6845 | CAP_402 | lio[14A4] |
| C6850 | CAP_402 | lio[14C3] |
| C6851 | CAP_402 | lio[14C2] |
| C6852 | CAP_402 | lio[14C2] |
| C6853 | CAP_603 | lio[14C3] |
| C6900 | CAP_805 | lio[15C6] |
| C6903 | CAP_402 | lio[15C6] |
| C6904 | CAP_402 | lio[15D6] |
| C6905 | CAP_402 | lio[15D4] |
| C6906 | CAP_402 | lio[15C2] |
| C6910 | CAP_402 | lio[15B7] |
| C6911 | CAP_402 | lio[15A7] |
| C6912 | CAP_402 | lio[15A6] |
| C6950 | CAP_603 | lio[15B5] |
| C7600 | CAP_603 | lio[16C2] |
| C7601 | CAP_805-2 | lio[16C1] |
| C7602 | CAP_P_CASE-C2-SM | lio[16C1] |
| C7603 | CAP_402 | lio[16C3] |
| C7610 | CAP_402 | lio[16A7] |
| C7620 | CAP_603 | lio[16C6] |
| C7621 | CAP_402 | lio[16C7] |
| C7622 | CAP_603 | lio[16B5] |
| C7623 | CAP_603 | lio[16B5] |
| C7624 | CAP_402 | lio[16B4] |
| C7625 | CAP_P_CASE-D2-LF | lio[16C3] |
| C7650 | CAP_603 | lio[16B2] |
| C7651 | CAP_603 | lio[16B1] |
| C7652 | CAP_P_CASE-C2-SM | lio[16B1] |
| C7653 | CAP_402 | lio[16B3] |
| C7660 | CAP_402 | lio[16A3] |
| C7670 | CAP_402 | lio[16C7] |
| C7671 | CAP_402 | lio[16C7] |
| C7900 | CAP_402 | lio[17C6] |
| C7901 | CAP_402 | lio[17D6] |
| C7902 | CAP_402 | lio[17C6] |
| C7903 | CAP_603 | lio[17C4] |
| C7904 | CAP_402 | lio[17D4] |
| C7905 | CAP_P_CASE-D2-LF | lio[17D2] |
| C7906 | CAP_P_CASE-D2-LF | lio[17D2] |
| C7907 | CAP_603 | lio[17D6] |
| C7908 | CAP_P_CASE-D2-LF | lio[17C2] |
| C7910 | CAP_603 | lio[17C1] |
| C7911 | CAP_402 | lio[17D5] |
| C7912 | CAP_402 | lio[17D4] |
| C7915 | CAP_402 | lio[17C6] |
| C7916 | CAP_805 | lio[17D3] |
| C7917 | CAP_805 | lio[17D2] |
| C7920 | CAP_402 | lio[17B5] |
| C7921 | CAP_402 | lio[17B5] |
| C7922 | CAP_402 | lio[17B5] |
| C7924 | CAP_402 | lio[17A4] |
| C7925 | CAP_402 | lio[17B4] |
| C7927 | CAP_402 | lio[17B1] |
| C7940 | CAP_603 | lio[17D7] |
| C7941 | CAP_402 | lio[17C7] |
| C7950 | CAP_603 | lio[17B6] |
| C7951 | CAP_603 | lio[17B4] |
| C7961 | CAP_402 | lio[17A7] |
| C7962 | CAP_402 | lio[17A7] |
| C7970 | CAP_603 | lio[17C4] |
| C7971 | CAP_402 | lio[17A2] |
| C7980 | CAP_402 | lio[17B7] |
| C7990 | CAP_402 | lio[17C6] |
| C9800 | CAP_402 | lio[19A7] |
| C9801 | CAP_402 | lio[19A5] |
| C9802 | CAP_402 | lio[19D6] |
| C9805 | CAP_402 | lio[19C6] |
| C9807 | CAP_402 | lio[19B5] |
| C9892 | CAP_402 | lio[19C3] |
| C9893 | CAP_402 | lio[19C3] |
| C9894 | CAP_402 | lio[19B3] |
| D4600 | DIODE_SCHOT_3P_A_SC-75 | lio[8B3] |
| D6900 | RCLAMP2402B_SC-75 | lio[15C7] |
| D6901 | DIODE_SOD-323 | lio[15D5] |
| D7900 | DIODE_SCHOT_SOD-123 | lio[17C3] |
| D7903 | ZENER_SOT23 | lio[17C4] |
| D7921 | DIODE_SOD-323 | lio[17B3] |
| D7940 | DIODE_3P_CA_SOT-523-3 | lio[17D7] |
| D7950 | DIODE_3P_C1_SOT-323 | lio[17B5] |
| DZ6702 | SUPPR_TRANSIENT1_402 | lio[13C5] |
| DZ6703 | SUPPR_TRANSIENT1_402 | lio[13C5] |
| DZ6704 | SUPPR_TRANSIENT1_402 | lio[13C5] |
| DZ6705 | SUPPR_TRANSIENT1_402 | lio[13C6] |
| DZ6706 | SUPPR_TRANSIENT1_402 | lio[13C6] |
| DZ6752 | SUPPR_TRANSIENT1_402 | lio[13A6] |
| DZ6753 | SUPPR_TRANSIENT1_402 | lio[13A6] |
| DZ6754 | SUPPR_TRANSIENT1_402 | lio[13A5] |
| DZ6755 | SUPPR_TRANSIENT1_402 | lio[13A5] |
| F6900 | FUSE_1206-1 | lio[15D5] |
| F7902 | FUSE_1206-1 | lio[17B2] |
| F9800 | FUSE_603 | lio[19D6] |
| FL3600 | FILTER_4P_1210-4SM1 | lio[7C3] |
| FL3601 | FILTER_4P_1210-4SM1 | lio[7B3] |
| J3400 | CON_F52RT_D2MT_SM_F-ST-SM | lio[5C5] |
| J3500 | CON_F26RT_S4MT_SM_M7 | lio[6D2] |
| | 5_F-RT-SM | |
| J3600 | CON_M80ST_D4MT_SM_M-ST-SM | lio[7C4] |
| J4600 | CON_F4RT_USB_S2MT_TH | lio[8C2] |
| | _F-RT-TH-USB-LFT | |
| J6700 | CON_F9RT_SPDIFTRAN_T | lio[13C8] |
| | H_F-RT-TH | |
| J6750 | CON_F8RT_SPDIFRCVR_T | lio[13B8] |
| | H2_F-RT-TH | |
| J6780 | CON_M8ST_S_TH_M-ST-T | lio[13C1] |
| | H | |
| J6900 | CON_F5RT_S2MT_TH3_F-RT-TH-MG3 | lio[15D8] |
| J6915 | CON_M12ST_S_SM_M-ST-SM | lio[15A4] |
| J9050 | CON_F5ST_S2MT_SM_F-S | lio[18C5] |
| | T-SM | |
| L3400 | FILTER_4P_1210-4SM1 | lio[5B2] |
| L4600 | FILTER_4P2_DLP11S | lio[8C4] |
| L4601 | IND_0603 | lio[8C4] |
| L6200 | IND_0402 | lio[10A6] |
| L6201 | IND_0402 | lio[10D6] |
| L6202 | IND_0402 | lio[10D3] |
| L6500 | IND_0402 | lio[11D6] |
| L6501 | IND_0402 | lio[11C6] |
| L6601 | IND_0402 | lio[12C7] |
| L6610 | IND_0402 | lio[12C7] |
| L6620 | IND_0402 | lio[12A7] |
| L6701 | IND_0603 | lio[13C4] |
| L6702 | IND_0402 | lio[13D4] |
| L6703 | IND_0402 | lio[13D4] |
| L6704 | IND_0402 | lio[13C4] |
| L6705 | IND_0402 | lio[13C4] |
| L6706 | IND_0402 | lio[13C4] |
| L6751 | IND_0402 | lio[13B4] |
| L6752 | IND_0402 | lio[13A4] |
| L6754 | IND_0402 | lio[13B4] |
| L6756 | IND_0402 | lio[13A4] |
| L6758 | IND_0402 | lio[13A4] |
| L6800 | IND_0402 | lio[14A7] |
| L6900 | FILTER_4P_SM | lio[15D7] |
| L6901 | IND_SM-1 | lio[15D7] |
| L7600 | IND_IHLP2525CZ-SM | lio[16C2] |
| L7650 | IND_IHLP2525CZ-SM | lio[16B2] |
| L7900 | IND_3P_FDA1254-SM | lio[17C2] |
| L9891 | IND_0402 | lio[19C4] |
| L9893 | IND_0402 | lio[19C4] |
| L9894 | IND_0402 | lio[19C4] |
| Q3450 | TRA_SINGLE_MOSFET_PCHN_SOT-23 | lio[5D2] |
| Q6800 | TRA_DUAL_SSM6N15FE_SOT563 | lio[14B7 14C7] |
| Q6801 | TRA_DUAL_SSM6N15FE_SOT563 | lio[14C5 14C6] |
| Q6802 | TRA_SSM3K15FV_SOD-VESM | lio[14B7] |
| Q6840 | TRA_SSM3K15FV_SOD-VESM | lio[14A3] |
| Q6841 | TRA_SSM3J16FV_SOD-VESM | lio[14A4] |
| Q6900 | TRA_DUAL_SSM6N15FE_SOT563 | lio[15C1 15C3] |
| Q6901 | TRA_DUAL_SSM6N15FE_SOT563 | lio[15C1 15C2] |
| Q6909 | TRA_DUAL_BSS84V_SOT-563 | lio[15D2] |
| Q6910 | TRA_SSM3K15FV_SOD-VESM | lio[15B4] |
| Q6950 | TRA_SI4413ADY_SO-8 | lio[15B4] |
| Q7600 | TRA_FDMS9600S_MLP | lio[16C3] |
| Q7610 | TRA_FDC697P_SOT-6 | lio[16A7] |
| Q7611 | TRA_FDC697P_SOT-6 | lio[16A3] |
| Q7650 | TRA_FDMS9600S_MLP | lio[16B2] |
| Q7900 | TRA_SI4413ADY_SO-8 | lio[17D4] |
| Q7901 | TRA_RJK_LFPAK | lio[17C3] |
| Q7902 | TRA_RJK_LFPAK | lio[17C3] |
| Q7920 | TRA_SI4413ADY_SO-8 | lio[17B4] |
| Q7921 | TRA_SI4413ADY_SO-8 | lio[17B3] |
| Q7922 | TRA_DUAL_SSM6N15FE_SOT563 | lio[17A4 17A4] |
| Q7924 | TRA_DUAL_SSM6N15FE_SOT563 | lio[17A3 17A5] |
| Q7940 | TRA_IRLML5203_SM | lio[17D7] |
| Q7950 | TRA_SSM3K15FV_SOD-VESM | lio[17C7] |
| Q7960 | TRA_DUAL_SSM6N15FE_SOT563 | lio[17A7 17A8] |
| Q7961 | TRA_DUAL_SSM6N15FE_SOT563 | lio[17A7 17A8] |
| Q7970 | TRA_SI4413ADY_SO-8 | lio[17B2] |
| Q9805 | TRA_DUAL_NPCH_NTZD3155C1_SOT-563 | lio[19B6 19C6] |
| Q9806 | TRA_FDMA530PZ_MICROFET | lio[19D5] |
| Q9807 | TRA_SSM3K15FV_SOD-VESM | lio[19C6] |
| R3450 | RES_402 | lio[5C2] |
| R3451 | RES_402 | lio[5C2] |
| R3500 | RES_402 | lio[6C6] |
| R3561 | RES_402 | lio[6B3] |
| R6201 | RES_402 | lio[10B5] |
| R6203 | RES_402 | lio[10D3] |
| R6204 | RES_402 | lio[10C6] |
| R6205 | RES_402 | lio[10B5] |
| R6206 | RES_402 | lio[10B3] |
| R6207 | RES_402 | lio[10B2] |
| R6220 | RES_402 | lio[10A6] |
| R6221 | RES_402 | lio[10A4] |
| R6222 | RES_402 | lio[10A4] |
| R6250 | RES_402 | lio[10C5] |
| R6251 | RES_402 | lio[10D6] |
| R6500 | RES_402 | lio[11C5] |
| R6510 | RES_402 | lio[11B5] |
| R6511 | RES_402 | lio[11B4] |
| R6512 | RES_402 | lio[11B4] |
| R6513 | RES_603 | lio[11C3] |
| R6514 | RES_402 | lio[11C4] |
| R6520 | RES_402 | lio[11A5] |
| R6521 | RES_402 | lio[11A4] |
| R6522 | RES_402 | lio[11A4] |
| R6523 | RES_603 | lio[11C3] |
| R6524 | RES_402 | lio[11C3] |
| R6601 | RES_402 | lio[12C7] |
| R6602 | RES_402 | lio[12C4] |
| R6603 | RES_402 | lio[12C7] |
| R6610 | RES_402 | lio[12C2] |
| R6611 | RES_402 | lio[12C2] |
| R6620 | RES_402 | lio[12B2] |
| R6621 | RES_402 | lio[12B2] |
| R6700 | RES_402 | lio[13C4] |
| R6749 | RES_402 | lio[13B7] |
| R6780 | RES_402 | lio[13C2] |
| R6790 | RES_402 | lio[13B2] |
| R6791 | RES_402 | lio[13B5] |
| R6801 | RES_402 | lio[14C7] |
| R6802 | RES_402 | lio[14C7] |
| R6803 | RES_402 | lio[14C7] |
| R6805 | RES_402 | lio[14C5] |
| R6806 | RES_402 | lio[14C6] |
| R6811 | RES_402 | lio[14B7] |
| R6812 | RES_402 | lio[14B7] |
| R6813 | RES_402 | lio[14B7] |
| R6836 | RES_402 | lio[14D2] |
| R6837 | RES_402 | lio[14D2] |
| R6840 | RES_402 | lio[14B4] |
| R6841 | RES_402 | lio[14A4] |
| R6842 | RES_402 | lio[14A4] |
| R6843 | RES_402 | lio[14A4] |
| R6845 | RES_402 | lio[14B4] |
| R6846 | RES_402 | lio[14A3] |
| R6850 | RES_402 | lio[14C2] |
| R6852 | RES_402 | lio[14C3] |
| R6855 | RES_402 | lio[14C3] |
| R6861 | RES_402 | lio[14B7] |
| R6900 | RES_402 | lio[15C2] |
| R6901 | RES_402 | lio[15D2] |
| R6902 | RES_402 | lio[15D5] |
| R6903 | RES_402 | lio[15C3] |
| R6904 | RES_402 | lio[15C7] |
| R6905 | RES_402 | lio[15D3] |
| R6907 | RES_805 | lio[15D4] |
| R6909 | RES_402 | lio[15D1] |
| R6911 | RES_402 | lio[15C2] |
| R6912 | RES_402 | lio[15B7] |
| R6913 | RES_402 | lio[15A7] |
| R6915 | RES_402 | lio[15A6] |
| R6916 | RES_402 | lio[15B6] |
| R6921 | RES_402 | lio[15B5] |
| R6950 | RES_402 | lio[15B4] |
| R6990 | RES_402 | lio[15C5] |
| R6991 | RES_402 | lio[15C4] |
| R7610 | RES_402 | lio[16A8] |
| R7620 | RES_402 | lio[16C5] |
| R7621 | RES_402 | lio[16C6] |
| R7622 | RES_402 | lio[16C7] |
| R7625 | RES_402 | lio[16C7] |
| R7660 | RES_402 | lio[16A4] |
| R7670 | RES_402 | lio[16C8] |
| R7900 | RES_402 | lio[17D5] |
| R7902 | RES_402 | lio[17D5] |
| R7903 | RES_402 | lio[17C3] |
| R7904 | RES_402 | lio[17C1] |
| R7905 | RES_402 | lio[17D3] |
| R7906 | RES_402 | lio[17B2] |
| R7907 | RES_0612 | lio[17D3] |
| R7908 | RES_0612 | lio[17C2] |
| R7910 | RES_402 | lio[17D4] |
| R7920 | RES_2525-1 | lio[17B3] |
| R7921 | RES_805 | lio[17B2] |
| R7922 | RES_402 | lio[17A4] |
| R7923 | RES_402 | lio[17A4] |
| R7924 | RES_402 | lio[17C8] |
| R7930 | RES_402 | lio[17B5] |
| R7931 | RES_402 | lio[17A5] |
| R7940 | RES_402 | lio[17D7] |
| R7941 | RES_402 | lio[17C7] |
| R7944 | RES_402 | lio[17C7] |
| R7950 | RES_402 | lio[17C8] |
| R7952 | RES_402 | lio[17B5] |
| R7953 | RES_402 | lio[17B5] |
| R7954 | RES_402 | lio[17B6] |
| R7960 | RES_402 | lio[17A7] |
| R7962 | RES_402 | lio[17A7] |
| R7963 | RES_402 | lio[17A7] |
| R7964 | RES_402 | lio[17A7] |
| R7966 | RES_402 | lio[17A7] |
| R7967 | RES_402 | lio[17A7] |
| R7968 | RES_402 | lio[17B7] |
| R7969 | RES_402 | lio[17A8] |
| R7970 | RES_603 | lio[17C4] |
| R7971 | RES_402 | lio[17A2] |
| R7972 | RES_402 | lio[17A2] |
| R7979 | RES_402 | lio[17A8] |
| R7992 | RES_402 | lio[17D5] |
| R9805 | RES_402 | lio[19C6] |
| R9806 | RES_402 | lio[19A6] |
| R9807 | RES_402 | lio[19B5] |
| R9808 | RES_402 | lio[19D6] |
| R9809 | RES_402 | lio[19D5] |
| R9810 | RES_402 | lio[19B6] |
| RX9892 | RES_603 | lio[19C4] |
| U3500 | PWR_CNTRL_TPS2231_QFN | lio[6C5] |
| U3551 | MC74VHC1G00_SC70-5 | lio[6A6] |
| U3560 | MC74VHC1G00_SC70-5 | lio[6B2] |
| U3561 | SN74LVC1G04_BGA | lio[6A3] |
| U4600 | SWI_TPS2068_MSOP | lio[8C6] |
| U5705 | INA193_SOT23-5 | lio[9C3] |
| U5715 | INA193_SOT23-5 | lio[9C6] |
| U5750 | TMP102_SOT563 | lio[9B5] |
| U6200 | AUDIO_ALC885B2_LQFP | lio[10D5] |
| U6201 | LREG_TPS79501DRB_SON | lio[10A5] |
| U6500 | MAX9724A_TQFN | lio[11D5] |
| U6610 | MAX9705_TDFN1 | lio[12C5] |
| U6620 | MAX9705_TDFN1 | lio[12B5] |
| U6900 | TPS3808_SOT23-6 | lio[15A7] |
| U6950 | MC74VHC1G08_SC70 | lio[15A5] |
| U6990 | COMPARATOR_LM397_SOT23-5 | lio[15C4] |
| U7600 | TPS51120_LLP | lio[16C6] |
| U7670 | 74LVC2G07_SOT886 | lio[16C8] |
| U7900 | ISL6257_QFN | lio[17D5] |
| U7901 | OPAMP_MAX4245_SC70-6 | lio[17B8] |
| U7950 | LREG_MAX8719_TDFN | lio[17C6] |
| U9800 | MC74VHC1G08_SC70 | lio[19A6] |
| U9801 | MC74VHC1G08_SC70 | lio[19A5] |
| XW6200 | SHORT_SM | lio[10A6] |
| XW6202 | SHORT_SM | lio[10A6] |
| XW6500 | SHORT_SM | lio[11C6] |
| XW6501 | SHORT_SM | lio[11C6] |
| XW6701 | SHORT_SM | lio[13A3] |
| XW6710 | SHORT_SM | lio[13B2] |
| XW6711 | SHORT_SM | lio[13B2] |
| XW6712 | SHORT_SM | lio[13B2] |
| XW6840 | SHORT_SM | lio[14B4] |
| XW6850 | SHORT_SM | lio[14C3] |
| XW6851 | SHORT_SM | lio[14B3] |
| XW7600 | SHORT_SM | lio[16A4] |
| XW7601 | SHORT_SM | lio[16A6] |
| XW7602 | SHORT_SM | lio[16A6] |
| XW7603 | SHORT_SM | lio[16A6] |
| XW7604 | SHORT_SM | lio[16A6] |
| XW7605 | SHORT_SM | lio[16A6] |
| XW7606 | SHORT_SM | lio[16A6] |
| XW7607 | SHORT_SM | lio[16B6] |
| XW7608 | SHORT_SM | lio[16B6] |
| XW7609 | SHORT_SM | lio[16B6] |
| XW7610 | SHORT_SM | lio[16B6] |
| XW7900 | SHORT_SM | lio[17C5] |
| XW7901 | SHORT_SM | lio[17D3] |
| XW7902 | SHORT_SM | lio[17D3] |
| XW7903 | SHORT_SM | lio[17C2] |
| XW7904 | SHORT_SM | lio[17C2] |
| ZT0900 | MTGHOLE | lio[4D3] |
| ZT0910 | MTGHOLE | lio[4A8] |
| ZT0920 | MTGHOLE | lio[4B8] |
| ZT0930 | MTGHOLE | lio[4A8] |



www.laptopschematics.com

Title: Cref Part Report
Design: lio
Date: Jun 27 17:31:55 2007

| | | |
|---|---|---|
| C3400 | CAP_402 | lio[5C3] |
| C3401 | CAP_603 | lio[5C3] |
| C3410 | CAP_603 | lio[5C3] |
| C3411 | CAP_402 | lio[5C3] |
| C3420 | CAP_603 | lio[5C3] |
| C3421 | CAP_402 | lio[5C3] |
| C3422 | CAP_402 | lio[5C3] |
| C3450 | CAP_402 | lio[5C3] |
| C3451 | CAP_402 | lio[5C2] |
| C3500 | CAP_402 | lio[6C4] |
| C3501 | CAP_402 | lio[6C4] |
| C3502 | CAP_402 | lio[6C4] |
| C3503 | CAP_603 | lio[6C4] |
| C3504 | CAP_603 | lio[6C4] |
| C3505 | CAP_603 | lio[6C4] |
| C3530 | CAP_402 | lio[6C8] |
| C3531 | CAP_603 | lio[6C7] |
| C3534 | CAP_402 | lio[6C8] |
| C3535 | CAP_603 | lio[6C7] |
| C3550 | CAP_402 | lio[6A7] |
| C3560 | CAP_402 | lio[6A3] |
| C4600 | CAP_603 | lio[8B6] |
| C4601 | CAP_402 | lio[8B7] |
| C4602 | CAP_603 | lio[8C5] |
| C4603 | CAP_P_B2 | lio[8B5] |
| C4650 | CAP_402 | lio[8C3] |
| C4651 | CAP_402 | lio[8B3] |
| C5605 | CAP_402 | lio[9C3] |
| C5615 | CAP_402 | lio[9C7] |
| C5650 | CAP_402 | lio[9B4] |
| C6200 | CAP_402 | lio[10D6] |
| C6201 | CAP_402 | lio[10D6] |
| C6203 | CAP_402 | lio[10D6] |
| C6204 | CAP_P_CASE-A3-LF | lio[10D4] |
| C6205 | CAP_P_CASE-A3-LF | lio[10A3] |
| C6206 | CAP_402 | lio[10D4] |
| C6207 | CAP_402 | lio[10D3] |
| C6208 | CAP_603 | lio[10A5] |
| C6209 | CAP_402 | lio[10A5] |
| C6210 | CAP_402 | lio[10A5] |
| C6220 | CAP_402 | lio[10B6] |
| C6221 | CAP_P_SMA-LF | lio[10B4] |
| C6222 | CAP_402 | lio[10B4] |
| C6500 | CAP_0805 | lio[11D5] |
| C6501 | CAP_402 | lio[11D5] |
| C6502 | CAP_0805 | lio[11C4] |
| C6503 | CAP_402 | lio[11C4] |
| C6504 | CAP_603 | lio[11C3] |
| C6510 | CAP_P_SMA-LF | lio[11B6] |
| C6511 | CAP_402 | lio[11B4] |
| C6512 | CAP_603 | lio[11B4] |
| C6520 | CAP_P_SMA-LF | lio[11A6] |
| C6521 | CAP_402 | lio[11A4] |
| C6522 | CAP_603 | lio[11B4] |
| C6610 | CAP_402 | lio[12C5] |
| C6611 | CAP_402 | lio[12C4] |
| C6612 | CAP_P_CASE-B2 | lio[12C4] |
| C6613 | CAP_402 | lio[12C6] |
| C6614 | CAP_402 | lio[12C6] |
| C6620 | CAP_402 | lio[12B5] |
| C6621 | CAP_402 | lio[12B5] |
| C6622 | CAP_P_CASE-B2 | lio[12B5] |
| C6623 | CAP_402 | lio[12A6] |
| C6624 | CAP_402 | lio[12A6] |
| C6700 | CAP_402 | lio[13C7] |
| C6705 | CAP_402 | lio[13C5] |
| C6750 | CAP_402 | lio[13A7] |
| C6751 | CAP_603 | lio[13A7] |
| C6756 | CAP_402 | lio[13A5] |
| C6800 | CAP_402 | lio[14A4] |
| C6801 | CAP_402 | lio[14C7] |
| C6802 | CAP_402 | lio[14B7] |
| C6811 | CAP_402 | lio[14A7] |
| C6832 | CAP_0805 | lio[14B2] |
| C6833 | CAP_0805 | lio[14B2] |
| C6850 | CAP_402 | lio[14C3] |
| C6851 | CAP_402 | lio[14C4] |
| C6852 | CAP_402 | lio[14C2] |
| C6853 | CAP_603 | lio[14D3] |
| C6900 | CAP_805 | lio[15C7] |
| C6901 | CAP_805 | lio[15D7] |
| C6903 | CAP_402 | lio[15C7] |
| C6904 | CAP_402 | lio[15D6] |
| C6905 | CAP_402 | lio[15D4] |
| C6906 | CAP_402 | lio[15C2] |
| C6910 | CAP_402 | lio[15B7] |
| C6911 | CAP_402 | lio[15A7] |
| C6912 | CAP_402 | lio[15A6] |
| C6950 | CAP_603 | lio[15B5] |
| C7600 | CAP_603 | lio[16C2] |
| C7601 | CAP_805-2 | lio[16C1] |
| C7602 | CAP_P_CASE-C2-SM | lio[16C1] |
| C7603 | CAP_402 | lio[16C3] |
| C7610 | CAP_402 | lio[16A7] |
| C7620 | CAP_603 | lio[16C6] |
| C7621 | CAP_402 | lio[16C7] |
| C7622 | CAP_603 | lio[16B5] |
| C7623 | CAP_603 | lio[16B5] |
| C7624 | CAP_402 | lio[16B4] |
| C7625 | CAP_P_CASE-D2-LF | lio[16C3] |
| C7650 | CAP_603 | lio[16B2] |
| C7651 | CAP_603 | lio[16B1] |
| C7652 | CAP_P_CASE-C2-SM | lio[16B1] |
| C7653 | CAP_402 | lio[16B3] |
| C7660 | CAP_402 | lio[16A3] |
| C7900 | CAP_402 | lio[17C6] |
| C7901 | CAP_402 | lio[17D6] |
| C7902 | CAP_402 | lio[17C6] |
| C7903 | CAP_603 | lio[17C4] |
| C7904 | CAP_402 | lio[17D4] |
| C7905 | CAP_P_CASE-D2-LF | lio[17D2] |
| C7906 | CAP_P_CASE-D2-LF | lio[17D2] |
| C7907 | CAP_603 | lio[17D6] |
| C7908 | CAP_P_CASE-D2-LF | lio[17C2] |
| C7910 | CAP_603 | lio[17C1] |
| C7911 | CAP_402 | lio[17D5] |
| C7912 | CAP_402 | lio[17D4] |
| C7915 | CAP_402 | lio[17C6] |
| C7916 | CAP_805 | lio[17D3] |
| C7917 | CAP_805 | lio[17D2] |
| C7920 | CAP_402 | lio[17B5] |
| C7921 | CAP_402 | lio[17B5] |
| C7922 | CAP_402 | lio[17B5] |
| C7924 | CAP_402 | lio[17A4] |
| C7925 | CAP_402 | lio[17B4] |
| C7927 | CAP_402 | lio[17B1] |
| C7930 | CAP_402 | lio[17A1] |
| C7940 | CAP_603 | lio[17D7] |
| C7941 | CAP_402 | lio[17C7] |
| C7950 | CAP_603 | lio[17B6] |
| C7951 | CAP_603 | lio[17B4] |
| C7961 | CAP_402 | lio[17A7] |
| C7962 | CAP_402 | lio[17A7] |
| C7970 | CAP_603 | lio[17C4] |
| C7971 | CAP_402 | lio[17A2] |
| C7980 | CAP_402 | lio[17B7] |
| C7990 | CAP_402 | lio[17C6] |
| C9800 | CAP_402 | lio[19D7] |
| C9820 | CAP_402 | lio[19C5] |
| C9821 | CAP_402 | lio[19D4] |
| C9822 | CAP_603-1 | lio[19C4] |
| C9830 | CAP_603 | lio[19C5] |
| C9832 | CAP_402 | lio[19B6] |
| C9840 | CAP_402 | lio[19A5] |
| C9845 | CAP_402 | lio[19A4] |
| C9850 | CAP_402 | lio[19A3] |
| C9855 | CAP_402 | lio[19C3] |
| C9900 | CAP_805 | lio[20C6] |
| C9910 | CAP_402 | lio[20C6] |
| C9913 | CAP_402-LF | lio[20B7] |
| C9914 | CAP_402 | lio[20B7] |
| C9915 | CAP_603 | lio[20B7] |
| C9916 | CAP_402 | lio[20B6] |
| C9918 | CAP_603-1 | lio[20B6] |
| C9919 | CAP_402 | lio[20B6] |
| C9922 | CAP_402 | lio[20B4] |
| C9923 | CAP_402 | lio[20B4] |
| C9924 | CAP_402 | lio[20B3] |
| C9925 | CAP_402 | lio[20B3] |
| C9932 | CAP_402 | lio[20B2] |
| C9950 | CAP_1210 | lio[20D4] |
| C9991 | CAP_402 | lio[20C2] |
| C9992 | CAP_402 | lio[20C2] |
| C9993 | CAP_402 | lio[20B2] |
| C9994 | CAP_402 | lio[20B2] |
| D4600 | DIODE_SCHOT_3P_A_SC-75 | lio[8B3] |
| D6900 | RCLAMP2402B_SC-75 | lio[15C7] |
| D6901 | DIODE_SOD-323 | lio[15D5] |
| D7900 | DIODE_SCHOT_SOD-123 | lio[17C3] |
| D7903 | ZENER_SOT23 | lio[17C4] |
| D7921 | DIODE_SOD-323 | lio[17B3] |
| D7940 | DIODE_3P_CA_SOT-523-3 | lio[17D7] |
| D7950 | DIODE_3P_C1_SOT-323 | lio[17B5] |
| D9825 | DIODE_3P_A1_SC81 | lio[19D3] |
| D9835 | DIODE_SOD-523 | lio[19B4] |
| D9845 | DIODE_SOD-523 | lio[19A4] |
| D9850 | DPAK3P_DIODE_SOT-363 | lio[19B4 19B2 19B2] |
| D9930 | DPAK3P_DIODE_SOT-363 | lio[19A6] |
| D9930 | DPAK3P_DIODE_SOT-363 | lio[20B3 20B3] |
| DZ6702 | SUPPR_TRANSIENT1_402 | lio[13C5] |
| DZ6703 | SUPPR_TRANSIENT1_402 | lio[13C5] |
| DZ6704 | SUPPR_TRANSIENT1_402 | lio[13C5] |
| DZ6706 | SUPPR_TRANSIENT1_402 | lio[13C6] |
| DZ6752 | SUPPR_TRANSIENT1_402 | lio[13A6] |
| DZ6753 | SUPPR_TRANSIENT1_402 | lio[13A5] |
| DZ6754 | SUPPR_TRANSIENT1_402 | lio[13A5] |
| DZ6755 | SUPPR_TRANSIENT1_402 | lio[13A5] |
| F6900 | FUSE_1206 | lio[15D5] |
| F7902 | FUSE_1206 | lio[17B2] |
| F9900 | FUSE_603-LF | lio[20D7] |
| FL3600 | FILTER_4P_1210-4SM1 | lio[7C3] |
| FL3601 | FILTER_4P_1210-4SM1 | lio[7B3] |
| J3400 | CON_F52RT_D2MT_SM_F-ST-SM | lio[5C5] |
| J3500 | CON_F26RT_S4MT_SM_M75_F-RT-SM | lio[6D2] |
| J3600 | CON_M80ST_D4MT_SM_M-ST-SM | lio[7C4] |
| J4600 | CON_F4RT_USB_S2MT_TH_F-RT-TH-USB-LFT | lio[8C2] |
| J6700 | CON_F8RT_SPDIFTRAN_TH2_F-RT-TH | lio[13D8] |
| J6750 | CON_F8RT_SPDIFRCVR_TH2_F-RT-TH | lio[13B8] |
| J6780 | CON_M8ST_S_TH_M-ST-TH | lio[13C1] |
| J6900 | CON_F5RT_S2MT_TH3_F-RT-TH-MG3 | lio[15D8] |
| J6915 | CON_M12ST_S_SM_M-ST-SM | lio[15A4] |
| J9050 | CON_F5ST_S2MT_SM_F-ST-SM | lio[18C5] |
| L3400 | FILTER_4P_1210-4SM1 | lio[5B2] |
| L4600 | FILTER_4P_1210-4SM1 | lio[8C4] |
| L4601 | IND_0603 | lio[8C4] |
| L6200 | IND_0402 | lio[10A6] |
| L6201 | IND_0402 | lio[10D7] |
| L6202 | IND_0402 | lio[10D4] |
| L6500 | IND_0402 | lio[11D6] |
| L6501 | IND_0402 | lio[11C6] |
| L6601 | IND_0402 | lio[12C7] |
| L6610 | IND_0402 | lio[12C7] |
| L6620 | IND_0402 | lio[12A7] |
| L6701 | IND_0603-LF | lio[13D4] |
| L6704 | IND_0402 | lio[13C4] |
| L6706 | IND_0402 | lio[13C4] |
| L6751 | IND_0402 | lio[13B4] |
| L6754 | IND_0402 | lio[13B4] |
| L6756 | IND_0402 | lio[13B4] |
| L6758 | IND_0402 | lio[13A4] |
| L6800 | IND_0402 | lio[14A4] |
| L6900 | FILTER_4P_SM | lio[15D6] |
| L6901 | IND_SM-1 | lio[15D6] |
| L7600 | IND_IHLP | lio[16C2] |
| L7650 | IND_IHLP | lio[16B2] |
| L7900 | IND_3P_FDA1254-SM | lio[17C2] |
| L9950 | IND_IHLP2525CZ-SM | lio[20D3] |
| L9991 | IND_0402-LF | lio[20C2] |
| L9992 | IND_0402-LF | lio[20C2] |
| L9993 | IND_0402-LF | lio[20C2] |
| L9994 | IND_0402-LF | lio[20B2] |
| Q3450 | TRA_SINGLE_MOSFET_PC HN_SOT-23 | lio[5D2] |
| Q6800 | TRA_DUAL_SSM6N15FE_S OT563 | lio[14B7 14C6] |
| Q6801 | TRA_DUAL_SSM6N15FE_S OT563 | lio[14C5 14C6] |
| Q6802 | TRA_SSM3K15FV_SOD-VE SM | lio[14A6] |
| Q6900 | TRA_DUAL_SSM6N15FE_S OT563 | lio[15C1 15C3] |
| Q6901 | TRA_DUAL_SSM6N15FE_S OT563 | lio[15C1 15C2] |
| Q6909 | TRA_DUAL_BSS84V_SOT-563 | lio[15D2] |
| Q6910 | TRA_SSM3K15FV_SOD-VE SM | lio[15B4] |
| Q6950 | TRA_SI4413ADY_SO-8 | lio[15B4] |
| Q7600 | TRA_FDMS9600S_MLP | lio[16C3] |
| Q7610 | TRA_DUAL_PWRPK_PCHN_6P_PWRPK-1212-8 | lio[16A3 16A7] |
| Q7650 | TRA_FDMS9600S_MLP | lio[16B2] |
| Q7900 | TRA_SI4413ADY_SO-8 | lio[17D4] |
| Q7901 | TRA_RJK_LFPAK | lio[17C3] |
| Q7902 | TRA_RJK_LFPAK | lio[17C3] |
| Q7920 | TRA_SI4413ADY_SO-8 | lio[17B4] |
| Q7921 | TRA_SI4413ADY_SO-8 | lio[17B3] |
| Q7922 | TRA_DUAL_SSM6N15FE_S OT563 | lio[17A4 17A4] |
| Q7924 | TRA_DUAL_SSM6N15FE_S OT563 | lio[17A3 17A5] |
| Q7940 | TRA_IRLML5203_SM | lio[17D7] |
| Q7950 | TRA_SSM3K15FV_SOD-VE SM | lio[17C7] |
| Q7960 | TRA_DUAL_SSM6N15FE_S OT563 | lio[17A7 17A8] |
| Q7961 | TRA_DUAL_SSM6N15FE_S OT563 | lio[17A7 17A8] |
| Q7970 | TRA_SI4413ADY_SO-8 | lio[17B2] |
| Q9805 | TRA_DUAL_NPCH_NTZD3155C1_SOT-563 | lio[19B7 19C7] |
| Q9850 | TRA_UP04601_2_SSMINI6-F1 | lio[19C3 19B3] |
| Q9905 | TRA_DUAL_NPCH_NTZD3155C1_SOT-563 | lio[20C6 20C8] |
| Q9950 | TRA_DUAL_MOSFET_NPCHN3_PWRPK-1212-8 | lio[20D4 20C4] |
| Q9960 | TRA_DUAL_MOSFET_NPCHN3_PWRPK-1212-8 | lio[20C4 20C4] |
| R3450 | RES_402 | lio[5C2] |
| R3451 | RES_402 | lio[5C2] |
| R3500 | RES_402 | lio[6C6] |
| R3561 | RES_402 | lio[6B3] |
| R6201 | RES_402 | lio[10B6] |
| R6203 | RES_402 | lio[10C3] |
| R6204 | RES_402 | lio[10C7] |
| R6205 | RES_402 | lio[10B6] |
| R6206 | RES_402 | lio[10B4] |
| R6207 | RES_402 | lio[10B3] |
| R6220 | RES_402 | lio[10A6] |
| R6221 | RES_402 | lio[10A4] |
| R6222 | RES_402 | lio[10A4] |
| R6250 | RES_402 | lio[10B2] |
| R6251 | RES_402 | lio[10B2] |
| R6500 | RES_402 | lio[11C5] |
| R6510 | RES_402 | lio[11B5] |
| R6511 | RES_402 | lio[11B4] |
| R6512 | RES_402 | lio[11B4] |
| R6513 | RES_603 | lio[11D3] |
| R6514 | RES_402 | lio[11C3] |
| R6520 | RES_402 | lio[11A5] |
| R6521 | RES_402 | lio[11A4] |
| R6522 | RES_402 | lio[11A4] |
| R6523 | RES_603 | lio[11C2] |
| R6524 | RES_402 | lio[11C3] |
| R6601 | RES_402 | lio[12C7] |
| R6602 | RES_402 | lio[12C4] |
| R6603 | RES_402 | lio[12C7] |
| R6610 | RES_402 | lio[12C2] |
| R6611 | RES_402 | lio[12C2] |
| R6620 | RES_402 | lio[12B2] |
| R6621 | RES_402 | lio[12B2] |
| R6700 | RES_402 | lio[13C4] |
| R6701 | RES_402 | lio[13C4] |
| R6720 | RES_603 | lio[13D6] |
| R6721 | RES_402 | lio[13D6] |
| R6722 | RES_402 | lio[13C6] |
| R6723 | RES_402 | lio[13C6] |
| R6724 | RES_402 | lio[13C6] |
| R6725 | RES_402 | lio[13B6] |
| R6726 | RES_402 | lio[13B6] |
| R6727 | RES_402 | lio[13B6] |
| R6728 | RES_402 | lio[13B6] |
| R6729 | RES_402 | lio[13A6] |
| R6749 | RES_402 | lio[13B7] |
| R6751 | RES_402 | lio[13A4] |
| R6780 | RES_402 | lio[13C2] |
| R6790 | RES_402 | lio[13B2] |
| R6791 | RES_402 | lio[13B6] |
| R6792 | RES_402 | lio[13C8] |
| R6793 | RES_402 | lio[13C8] |
| R6801 | RES_402 | lio[14C7] |
| R6802 | RES_402 | lio[14C7] |
| R6803 | RES_402 | lio[14B7] |
| R6805 | RES_402 | lio[14C5] |
| R6806 | RES_402 | lio[14C5] |
| R6811 | RES_402 | lio[14A7] |
| R6812 | RES_402 | lio[14A7] |
| R6813 | RES_402 | lio[14A6] |
| R6836 | RES_402 | lio[14B2] |
| R6837 | RES_402 | lio[14B2] |
| R6850 | RES_402 | lio[14D3] |
| R6851 | RES_402 | lio[14C3] |
| R6852 | RES_402 | lio[14C3] |
| R6853 | RES_402 | lio[14C3] |
| R6854 | RES_402 | lio[14C3] |
| R6855 | RES_402 | lio[14D3] |
| R6861 | RES_402 | lio[14B7] |
| R6900 | RES_402 | lio[15C2] |
| R6901 | RES_402 | lio[15D2] |
| R6902 | RES_402 | lio[15D5] |
| R6903 | RES_402 | lio[15C3] |
| R6904 | RES_402 | lio[15C6] |
| R6905 | RES_402 | lio[15D3] |
| R6907 | RES_805 | lio[15D4] |
| R6909 | RES_402 | lio[15D1] |
| R6911 | RES_402 | lio[15C2] |
| R6912 | RES_402 | lio[15B7] |
| R6913 | RES_402 | lio[15A7] |
| R6915 | RES_402 | lio[15A6] |
| R6916 | RES_402 | lio[15B6] |
| R6921 | RES_402 | lio[15B5] |
| R6950 | RES_402 | lio[15B4] |
| R6990 | RES_402 | lio[15C5] |
| R6991 | RES_402 | lio[15C4] |
| R7610 | RES_402 | lio[16A8] |
| R7620 | RES_402 | lio[16C5] |
| R7621 | RES_402 | lio[16C6] |
| R7622 | RES_402 | lio[16C7] |
| R7625 | RES_402 | lio[16C7] |
| R7660 | RES_402 | lio[16A4] |
| R7900 | RES_402 | lio[17D5] |
| R7902 | RES_402 | lio[17D5] |
| R7903 | RES_402 | lio[17C3] |
| R7904 | RES_402 | lio[17C1] |
| R7905 | RES_402 | lio[17D3] |
| R7906 | RES_402 | lio[17B2] |
| R7907 | RES_0612 | lio[17D3] |
| R7908 | RES_0612 | lio[17C2] |
| R7910 | RES_402 | lio[17D4] |
| R7920 | RES_2525 | lio[17B3] |
| R7921 | RES_805 | lio[17B2] |
| R7922 | RES_402 | lio[17A4] |
| R7923 | RES_402 | lio[17A4] |
| R7924 | RES_402 | lio[17C8] |
| R7930 | RES_402 | lio[17B5] |
| R7931 | RES_402 | lio[17A5] |
| R7940 | RES_402 | lio[17D7] |
| R7941 | RES_402 | lio[17C7] |
| R7944 | RES_402 | lio[17C7] |
| R7950 | RES_402 | lio[17C8] |
| R7952 | RES_402 | lio[17B5] |
| R7953 | RES_402 | lio[17B5] |
| R7954 | RES_402 | lio[17B6] |
| R7960 | RES_402 | lio[17A7] |
| R7962 | RES_402 | lio[17A7] |
| R7963 | RES_402 | lio[17A7] |
| R7964 | RES_402 | lio[17A7] |
| R7966 | RES_402 | lio[17A7] |
| R7967 | RES_402 | lio[17A7] |
| R7968 | RES_402 | lio[17B7] |
| R7969 | RES_402 | lio[17A8] |
| R7970 | RES_603 | lio[17C4] |
| R7971 | RES_402 | lio[17A2] |
| R7972 | RES_402 | lio[17A2] |
| R7973 | RES_402 | lio[17A1] |
| R7979 | RES_402 | lio[17A8] |
| R7992 | RES_402 | lio[17D5] |
| R9805 | RES_402 | lio[19C7] |
| R9806 | RES_402 | lio[19B7] |
| R9810 | RES_402 | lio[19C6] |
| R9811 | RES_402 | lio[19D5] |
| R9812 | RES_402 | lio[19D5] |
| R9813 | RES_402 | lio[19D5] |
| R9814 | RES_402 | lio[19C5] |
| R9820 | RES_402 | lio[19D5] |
| R9821 | RES_402 | lio[19C5] |
| R9825 | RES_402 | lio[19D3] |
| R9830 | RES_402 | lio[19B6] |
| R9831 | RES_402 | lio[19B6] |
| R9832 | RES_402 | lio[19B6] |
| R9833 | RES_402 | lio[19B5] |
| R9834 | RES_603 | lio[19B4] |
| R9835 | RES_402 | lio[19C4] |
| R9840 | RES_402 | lio[19B6] |
| R9841 | RES_402 | lio[19A6] |
| R9842 | RES_402 | lio[19B5] |
| R9843 | RES_402 | lio[19A5] |
| R9845 | RES_402 | lio[19B4] |
| R9850 | RES_402 | lio[19B3] |
| R9851 | RES_402 | lio[19A3] |
| R9853 | RES_402 | lio[19B3] |
| R9854 | RES_402 | lio[19C3] |
| R9855 | RES_402 | lio[19B3] |
| R9900 | RES_402 | lio[20C6] |
| R9905 | RES_402 | lio[20C7] |
| R9906 | RES_402 | lio[20C7] |
| R9910 | RES_402 | lio[20C6] |
| R9911 | RES_402 | lio[20C6] |
| R9912 | RES_402 | lio[20C5] |
| R9913 | RES_402 | lio[20B7] |
| R9917 | RES_402 | lio[20B6] |
| R9920 | RES_402 | lio[20B4] |
| R9921 | RES_402 | lio[20B4] |
| R9922 | RES_402 | lio[20B4] |
| R9923 | RES_402 | lio[20B4] |
| R9924 | RES_402 | lio[20B3] |
| R9925 | RES_402 | lio[20B3] |
| R9930 | RES_402 | lio[20B3] |
| R9931 | RES_402 | lio[20B3] |
| R9932 | RES_402 | lio[20B2] |
| R9950 | RES_402 | lio[20C4] |
| R9960 | RES_402 | lio[20C4] |
| U3500 | PWR_CNTRL_TPS2231_QFN | lio[6C5] |
| U3551 | MC74VHC1G00_SC70-5 | lio[6A6] |
| U3560 | MC74VHC1G00_SC70-5 | lio[6B2] |
| U3561 | SN74LVC1G04_BGA | lio[6A3] |
| U4600 | SWI_TPS2051BDGN_MSOP | lio[8C6] |
| U5605 | INA193_SOT23-5 | lio[9C3] |
| U5615 | INA193_SOT23-5 | lio[9C6] |
| U5650 | TMP106_WCSP-6 | lio[9B5] |
| U6200 | AUDIO_ALC885B2_LQFP | lio[10C5] |
| U6201 | LREG_MAX1819_UCSP | lio[10A5] |
| U6500 | MAX9724A_TQFN | lio[11D4] |
| U6610 | MAX9705_TDFN1 | lio[12C5] |
| U6620 | MAX9705_TDFN1 | lio[12B5] |
| U6900 | TPS3808_SOT23-6 | lio[15A7] |
| U6950 | MC74VHC1G08_SC70 | lio[15A5] |
| U6990 | COMPARATOR_LM397_SOT23-5 | lio[15C4] |
| U7600 | TPS51120_LLP | lio[16C6] |
| U7900 | ISL6257_QFN | lio[17D5] |
| U7901 | OPAMP_OPA333_SC70-5 | lio[17B8] |
| U7950 | LREG_MAX8719_TDFN | lio[17C6] |
| U9800 | MC74VHC1G08_SC70 | lio[19D7] |
| U9820 | TA75W393FU_SSOP | lio[19A5 19D4] |
| U9830 | COMPARATOR_TA75S393F_SSOP-5 | lio[19B4] |



www.laptopschematics.com

| | | |
|---|---|---|
| U9900 | BD9828FV_SSOP | lio[20C5] |
| XW6200 | SHORT_SM | lio[10A6] |
| XW6202 | SHORT_SM | lio[10A6] |
| XW6500 | SHORT_SM | lio[11C6] |
| XW6501 | SHORT_SM | lio[11C5] |
| XW6701 | SHORT_SM | lio[13A3] |
| XW6710 | SHORT_SM | lio[13B2] |
| XW6711 | SHORT_SM | lio[13B2] |
| XW6712 | SHORT_SM | lio[13B2] |
| XW6800 | SHORT_SM | lio[14C3] |
| XW7600 | SHORT_SM | lio[16A4] |
| XW7601 | SHORT_SM | lio[16A6] |
| XW7602 | SHORT_SM | lio[16A6] |
| XW7603 | SHORT_SM | lio[16A6] |
| XW7604 | SHORT_SM | lio[16A6] |
| XW7605 | SHORT_SM | lio[16A6] |
| XW7606 | SHORT_SM | lio[16A6] |
| XW7607 | SHORT_SM | lio[16B6] |
| XW7608 | SHORT_SM | lio[16B6] |
| XW7609 | SHORT_SM | lio[16B6] |
| XW7610 | SHORT_SM | lio[16B6] |
| XW7900 | SHORT_SM | lio[17C5] |
| XW7901 | SHORT_SM | lio[17D3] |
| XW7902 | SHORT_SM | lio[17D3] |
| XW7903 | SHORT_SM | lio[17C2] |
| XW7904 | SHORT_SM | lio[17C2] |
| XW9950 | SHORT_SM | lio[20D5] |
| ZT0900 | MTGHOLE | lio[4D3] |
| ZT0910 | MTGHOLE | lio[4A8] |
| ZT0920 | MTGHOLE | lio[4B8] |
| ZT0930 | MTGHOLE | lio[4A8] |